W2E200-HH38-12

AC axial compact fan

sickled blades (S series)

Beijing Hengrui Mechanical and Electrical Equipment Co,Ltd
Phone +86 10-62547612
zhangyu@bjhengrui.cn
en.bjhengrui.com

Nominal data

Type	**W2E200-HH38-12**
Motor	**M2E068-BF**

Phase		1~	1~	1~
Nominal voltage	VAC	230	230	230
Frequency	Hz	50	60	60
Type of data definition		fa	fa	fa
Valid for approval / standard		CE	CE	UL 2111
Speed	min^{-1}	2550	2800	2800
Power input	W	64	80	85
Current draw	A	0.29	0.35	0.36
Motor capacitor	µF	1.5	1.5	1.5
Capacitor voltage	VDB	450	450	450
Max. back pressure	Pa	100	120	120
Max. ambient temperature	°C	60	65	65
Starting current	A	0.55	0.54	0.54

ml = max. load · me = max. efficiency · fa = running at free air · cs = customer specs · cu = customer unit
Subject to alterations

AC axial compact fan

sickled blades (S series)

Technical features

Mass	2.1 kg
Size	200 mm
Surface of rotor	Coated in black
Material of blades	Sheet steel, coated in black
Material of wall ring	Die-cast aluminium
Number of blades	9
Direction of air flow	"V"
Direction of rotation	Counter-clockwise, seen on rotor
Type of protection	IP 44; Depending on installation and position
Insulation class	"B"
Humidity class	F0
Max. permissible ambient motor temp. (transp./ storage)	+ 80 °C
Min. permissible ambient motor temp. (transp./storage)	- 40 °C
Mounting position	Any
Condensate discharge holes	None
Operation mode	S1
Motor bearing	Ball bearing
Touch current acc. IEC 60990 (measuring network Fig. 4, TN system)	< 0.75 mA
Electrical leads	Via terminal strips, integrated capacitor connected via terminal strips
Motor protection	Thermal overload protector (TOP) brought out
Cable exit	Variable
Protection class	I (if protective earth is connected by customer)
Product conforming to standard	CE
Approval	VDE; UL 507; CSA C22.2 Nr.113

Beijing Hengrui Mechanical and Electrical Equipment Co,Ltd Phone +86 10-62547612 · Fax +86 10-62547612 · zhangyu@bjhengrui.cn · en.bjhengrui.com

AC axial compact fan

sickled blades (S series)

Product drawing

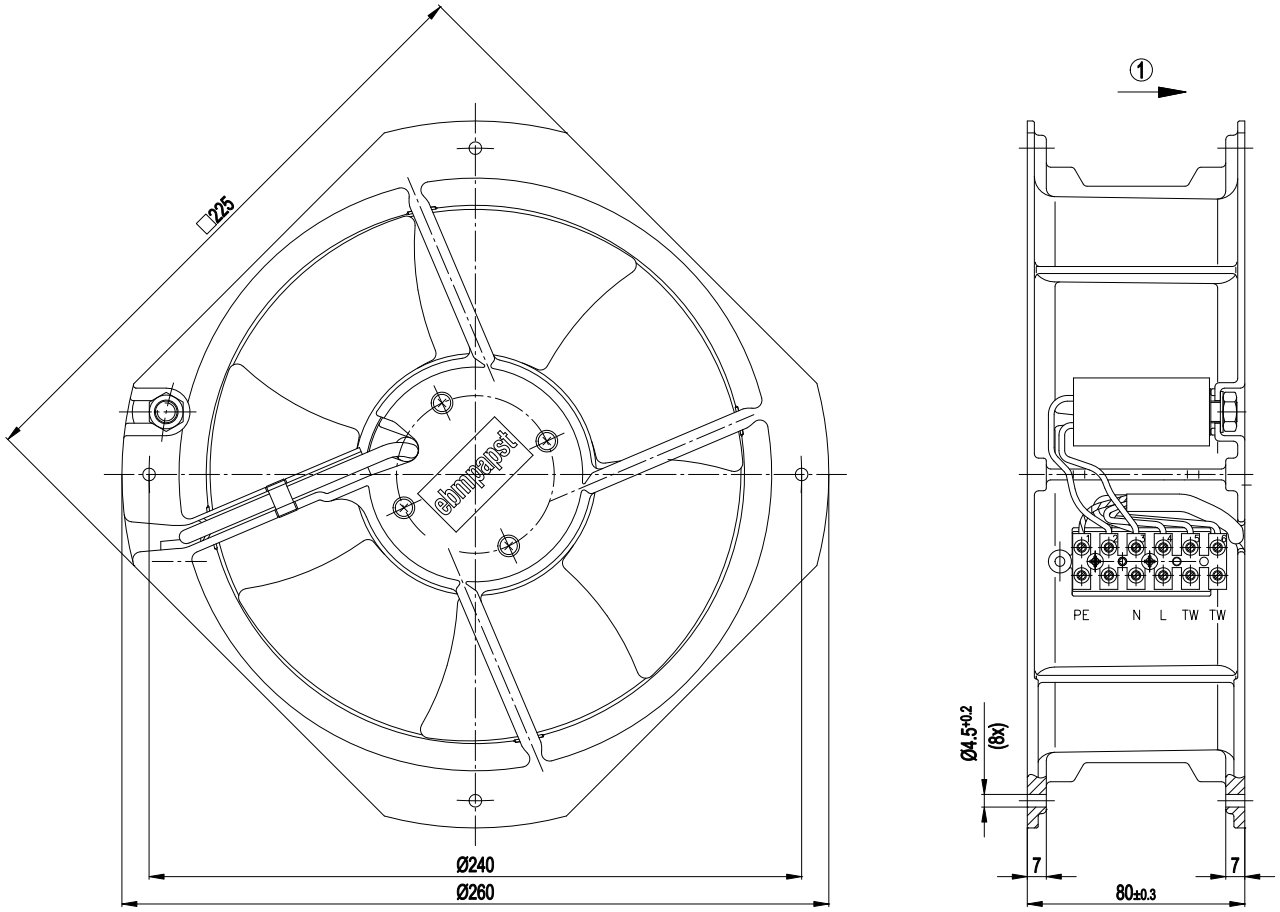

1	Direction of air flow "V"

Beijing Hengrui Mechanical and Electrical Equipment Co,Ltd Phone +86 10-62547612 · Fax +86 10-62547612 · zhangyu@bjhengrui.cn · en.bjhengrui.com

AC axial compact fan

sickled blades (S series)

Connection screen

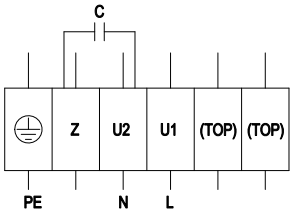

PE	green/yellow	Z	brown	U2	Black
U1	Blue	TOP	white	TOP	white

Beijing Hengrui Mechanical and Electrical Equipment Co,Ltd Phone +86 10-62547612 · Fax +86 10-62547612 · zhangyu@bjhengrui.cn · en.bjhengrui.com

AC axial compact fan

sickled blades (S series)

Charts: Air flow 50 Hz

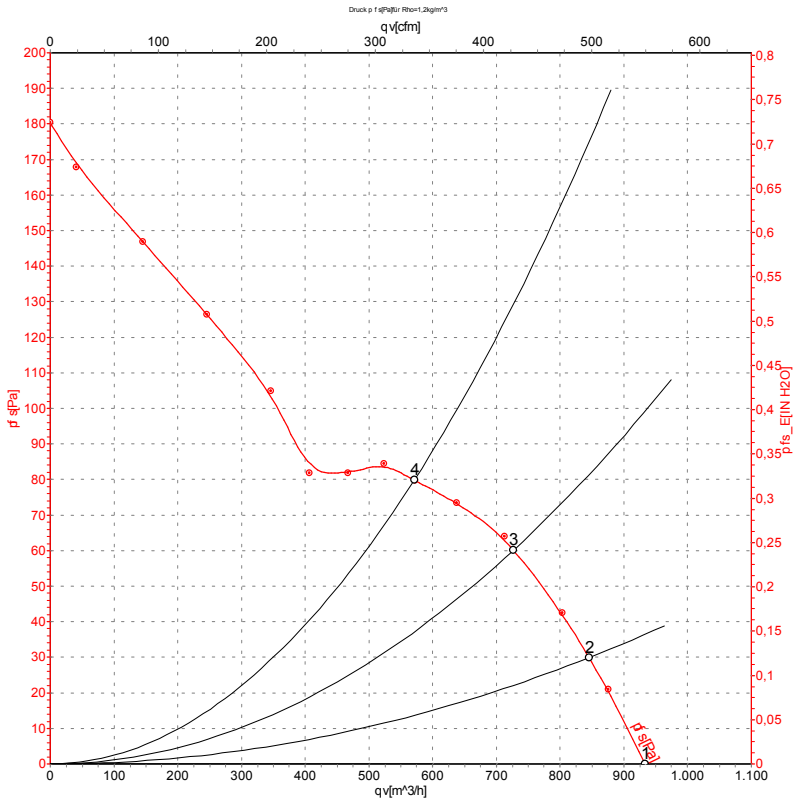

Measurement: LU-57318

Air performance measured as per ISO 5801 Installation category A. For detailed information on the measuring set-up, please contact ebm-papst. Suction-side noise levels: LwA measured as per ISO 13347 / LpA measured with 1m distance to fan axis. The values given are valid under the measuring conditions mentioned above and may vary according to the actual installation situation. With any deviation from the standard set-up, the specific values have to be checked and reviewed with the unit installed.

Measured values

	U	f	n	P_e	I	qv	p_{fs}
	V	Hz	min^{-1}	W	A	m^3/h	Pa
1	230	50	2550	64	0.29	935	0
2	230	50	2500	67	0.32	845	30
3	230	50	2450	70	0.32	725	60
4	230	50	2410	72	0.33	570	80

U = Supply voltage · f = Frequency · n = Speed · P_e = Power input · I = Current draw · qv = Air flow · p_{fs} = Pressure increase

Beijing Hengrui Mechanical and Electrical Equipment Co,Ltd Phone +86 10-62547612 · Fax +86 10-62547612 · zhangyu@bjhengrui.cn · en.bjhengrui.com

AC axial compact fan

sickled blades (S series)

Charts: Air flow 60 Hz

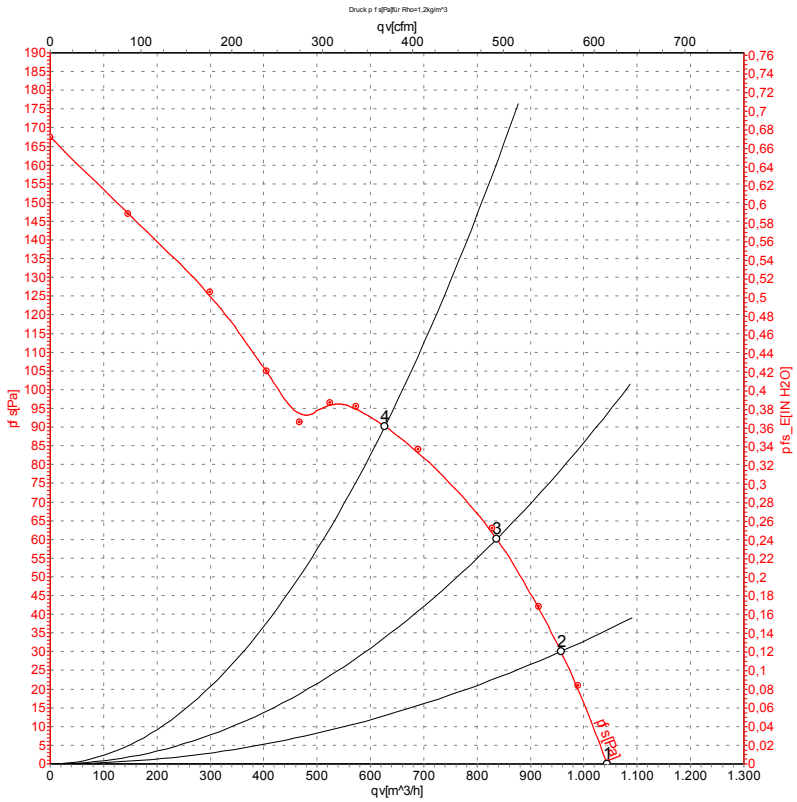

Measurement: LU-57319

Air performance measured as per ISO 5801 Installation category A. For detailed information on the measuring set-up, please contact ebm-papst. Suction-side noise levels: LwA measured as per ISO 13347 / LpA measured with 1m distance to fan axis. The values given are valid under the measuring conditions mentioned above and may vary according to the actual installation situation. With any deviation from the standard set-up, the specific values have to be checked and reviewed with the unit installed.

Measured values

	U	f	n	P_e	I	qv	p_{fs}
	V	Hz	min^{-1}	W	A	m^3/h	Pa
1	230	60	2800	80	0.35	1045	0
2	230	60	2775	81	0.35	955	30
3	230	60	2685	84	0.37	835	60
4	230	60	2575	88	0.38	625	90

U = Supply voltage · f = Frequency · n = Speed · P_e = Power input · I = Current draw · qv = Air flow · p_{fs} = Pressure increase

Beijing Hengrui Mechanical and Electrical Equipment Co,Ltd Phone +86 10-62547612 · Fax +86 10-62547612 · zhangyu@bjhengrui.cn · en.bjhengrui.com