AC axial compact fan

Beijing Hengrui Mechanical and Electrical Equipment Co,Ltd
Phone +86 10-62547612
zhangyu@bjhengrui.cn
en.bjhengrui.com

Nominal data

Type	**W2S130-AA13-87**
Motor	**M2S052-CA**

Phase		1~	1~
Nominal voltage	VAC	110	110
Frequency	Hz	50	60
Method of obtaining data		fa	fa
Valid for approval/standard		CE	CE
Speed (rpm)	min^{-1}	2800	3250
Power consumption	W	47	42
Current draw	A	0.72	0.55
Min. ambient temperature	°C	-25	-25
Max. ambient temperature	°C	40	70

ml = Max. load · me = Max. efficiency · fa = Free air · cs = Customer specification · ce = Customer equipment
Subject to change

AC axial compact fan

Technical description

Weight	1.05 kg
Size	130 mm
Motor size	52
Rotor surface	Rotor open, painted black
Blade material	Sheet steel, painted black
Fan housing material	Die-cast aluminum, painted black
Number of blades	7
Airflow direction	V
Direction of rotation	Counterclockwise, viewed toward rotor
Degree of protection	IP20
Insulation class	"B"
Moisture (F) / Environmental (H) protection class	H0+
Max. permitted ambient temp. for motor (transport/storage)	+ 80 °C
Min. permitted ambient temp. for motor (transport/storage)	- 40 °C
Installation position	Any
Condensation drainage holes	None, open rotor
Mode	S1
Motor bearing	Ball bearing
Technical features	- Speed monitoring Hall IC (with basic insulation)
Touch current according to IEC 60990 (measuring circuit Fig. 4, TN system)	< 0.75 mA
Motor protection	Thermal overload protector (TOP) internally connected
Protection class	I (if protective earth is connected by customer to the housing's connection point)
Conformity with standards	EN 60335-1; CE
Approval	UL 507; CSA C22.2 No. 113

Beijing Hengrui Mechanical and Electrical Equipment Co,Ltd Phone +86 10-62547612 · Fax +86 10-62547612 · zhangyu@bjhengrui.cn · en.bjhengrui.com

AC axial compact fan

Product drawing

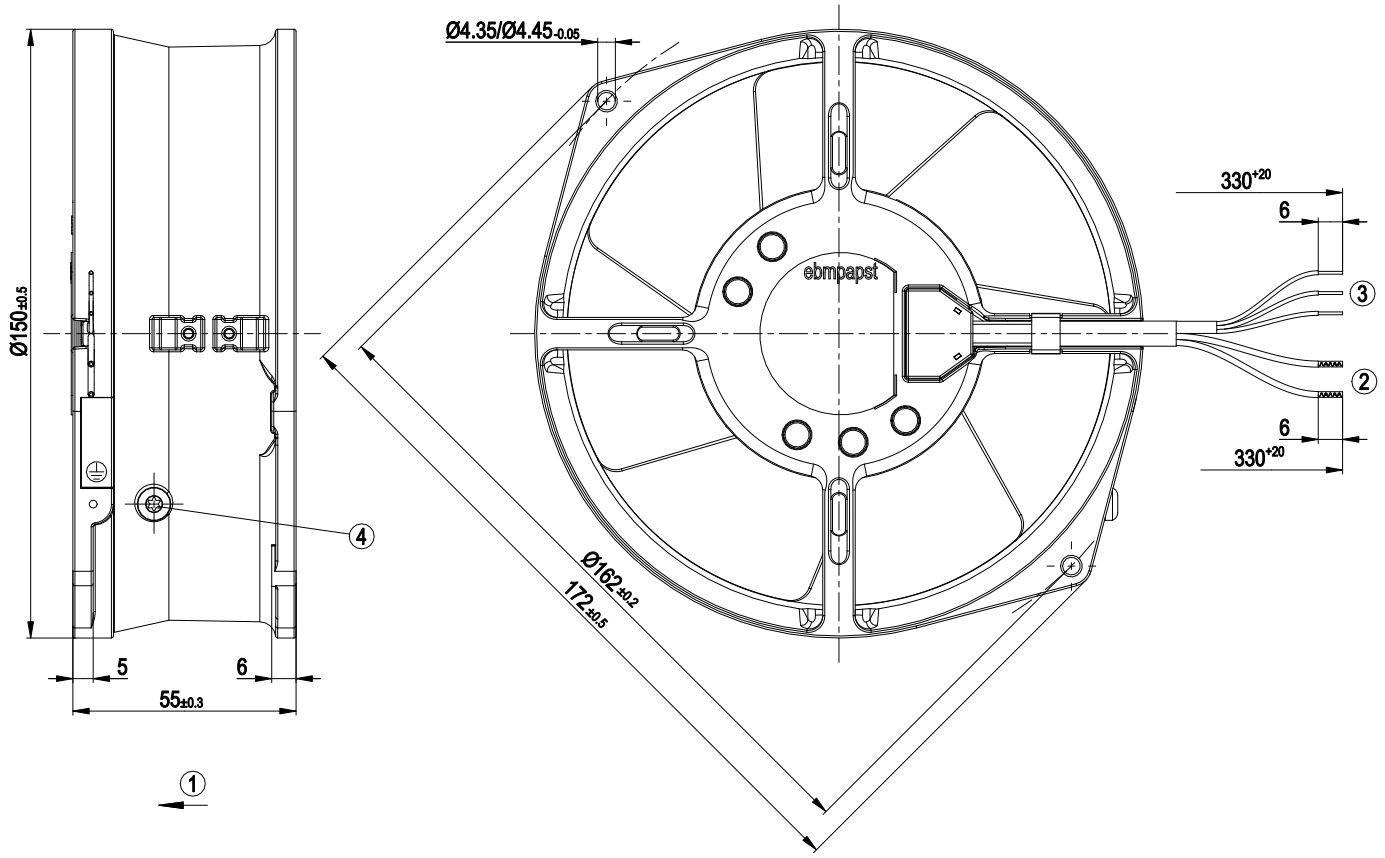

1	Direction of air flow "V"
2	Cable AWG 20, 2x crimped splices
3	Cable AWG 26, 3x tin-plated wire ends (6 mm)
4	M4 screw for fastening ground connector

Beijing Hengrui Mechanical and Electrical Equipment Co,Ltd Phone +86 10-62547612 · Fax +86 10-62547612 · zhangyu@bjhengrui.cn · en.bjhengrui.com

Connection diagram

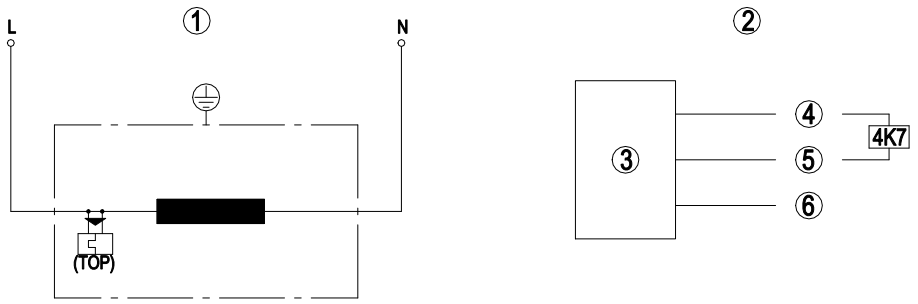

1	Fan connection diagram
TOP	Thermal overload protector
L	black
N	black
2	Hall IC circuit
3	Hall IC
4	red (+5 V)
5	white (out)
6	black (0 V)

Beijing Hengrui Mechanical and Electrical Equipment Co,Ltd Phone +86 10-62547612 · Fax +86 10-62547612 · zhangyu@bjhengrui.cn · en.bjhengrui.com

Curves: Air performance 50 Hz

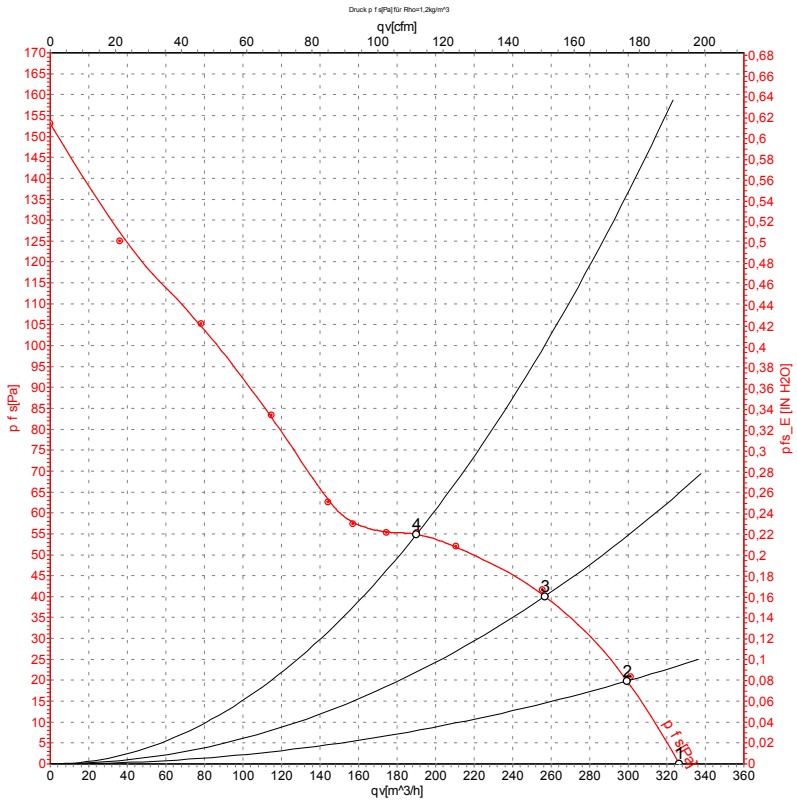

Measurement: LU-50883-1

Air performance measured according to ISO 5801 installation category A. For detailed information on the measurement setup, contact ebm-papst. Intake sound level: Sound power level according to ISO 13347 / sound pressure level measured at 1 m distance from fan axis. The values given are valid under the specified measuring conditions and may vary due to conditions of installation. For deviations from the standard configuration, the parameters have to be checked on the installed unit.

Measured values

	U	f	n	P_e	I	q_V	p_{fs}	q_V	p_{fs}
	V	Hz	min^{-1}	W	A	m^3/h	Pa	cfm	in. wg
1	110	50	2800	47	0.72	325	0	190	0.00
2	110	50	2800	48	0.72	300	22	175	0.09
3	110	50	2785	49	0.73	255	41	150	0.16
4	110	50	2785	48	0.72	190	55	110	0.22

U = Voltage · f = Frequency · n = Speed (rpm) · P_e = Power consumption · I = Current draw · q_V = Air flow · p_{fs} = Pressure increase

Beijing Hengrui Mechanical and Electrical Equipment Co,Ltd Phone +86 10-62547612 · Fax +86 10-62547612 · zhangyu@bjhengrui.cn · en.bjhengrui.com

AC axial compact fan

Curves: Air performance 60 Hz

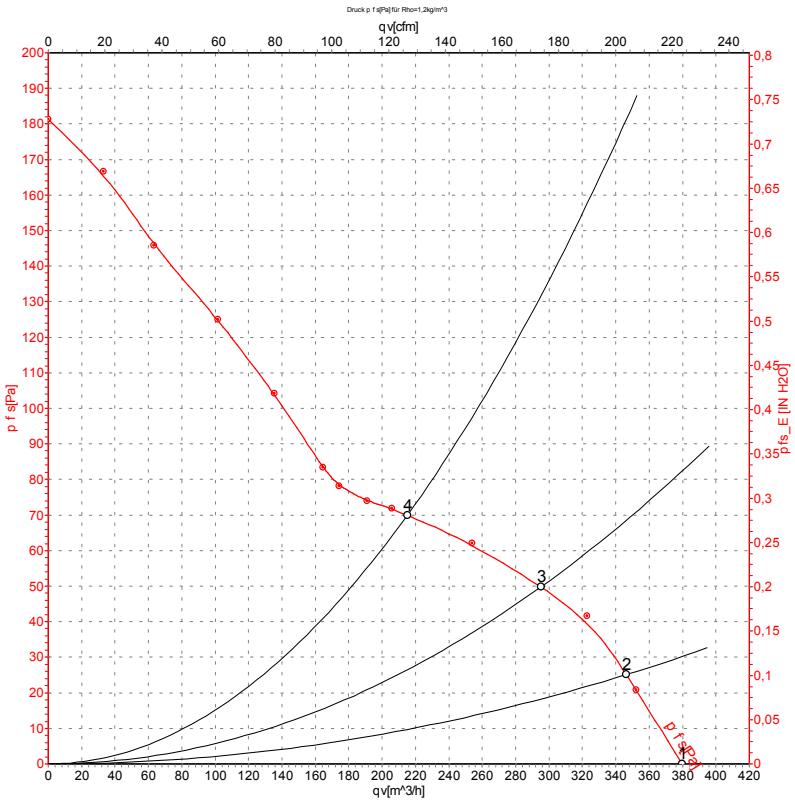

Measurement: LU-50884-1

Air performance measured according to ISO 5801 installation category A. For detailed information on the measurement setup, contact ebm-papst. Intake sound level: Sound power level according to ISO 13347 / sound pressure level measured at 1 m distance from fan axis. The values given are valid under the specified measuring conditions and may vary due to conditions of installation. For deviations from the standard configuration, the parameters have to be checked on the installed unit.

Measured values

	U	f	n	P_e	I	q_V	p_{fs}	q_V	p_{fs}
	V	Hz	min^{-1}	W	A	m^3/h	Pa	cfm	in. wg
1	110	60	3250	42	0.55	380	0	225	0.00
2	110	60	3225	42	0.55	345	25	205	0.10
3	110	60	3200	44	0.57	295	50	175	0.20
4	110	60	3200	44	0.57	215	70	125	0.28

U = Voltage · f = Frequency · n = Speed (rpm) · P_e = Power consumption · I = Current draw · q_V = Air flow · p_{fs} = Pressure increase

Beijing Hengrui Mechanical and Electrical Equipment Co,Ltd Phone +86 10-62547612 · Fax +86 10-62547612 · zhangyu@bjhengrui.cn · en.bjhengrui.com