40x40x10 mm

5.5~9.9 CFM

Specifications

MAGLev by SUNON	Bearing	Rating Voltage	Power Current	Power Consumption	Speed	Air Flow	Static Pressure	Noise	Weight	Curve
	● VAPO	(VDC)	(mA)	(WATTS)	(RPM)	(CFM)	(inch-H_2O)	(dB(A))	(g)	
MF40100V1-1000U-A99	●	5	136	0.68	7000	8.0	0.19	27.3	15.6	4
MF40100V2-1000U-A99	●	5	94	0.47	5800	7.0	0.12	20.6	15.6	5
MF40101VX-1000U-A99	●	12	87	1.05	8500	9.9	0.25	31.4	15.6	2
MF40101V1-1000U-A99	●	12	51	0.62	7000	8.0	0.19	27.3	15.6	4
MF40101V2-1000U-A99	●	12	40	0.48	5800	7.0	0.12	20.6	15.6	5

Model	Bearing	Rating Voltage	Power Current	Power Consumption	Speed	Air Flow	Static Pressure	Noise	Weight	Curve
	◐ 2BALL ○ Sleeve	(VDC)	(mA)	(WATTS)	(RPM)	(CFM)	(inch-H_2O)	(dB(A))	(g)	
EF40101BX-1000U-A99	◐	12	122	1.47	9000	10.0	0.27	33.7	15.8	1
EF40101B1-1000U-A99	◐	12	82	0.99	7000	8.0	0.19	27.3	15.8	3
EF40101B2-1000U-A99	◐	12	37	0.45	5000	5.5	0.10	17.7	15.8	6

Air Flow-Static Pressure Characteristics

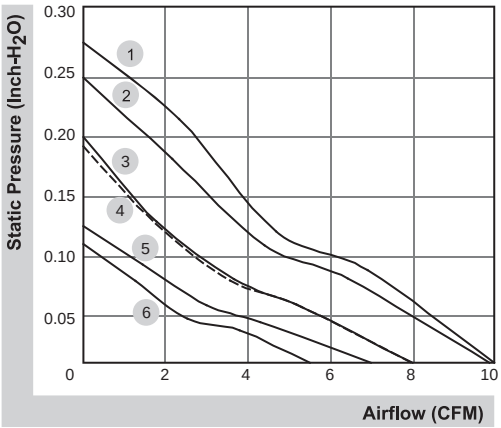

External dimensions(mm)

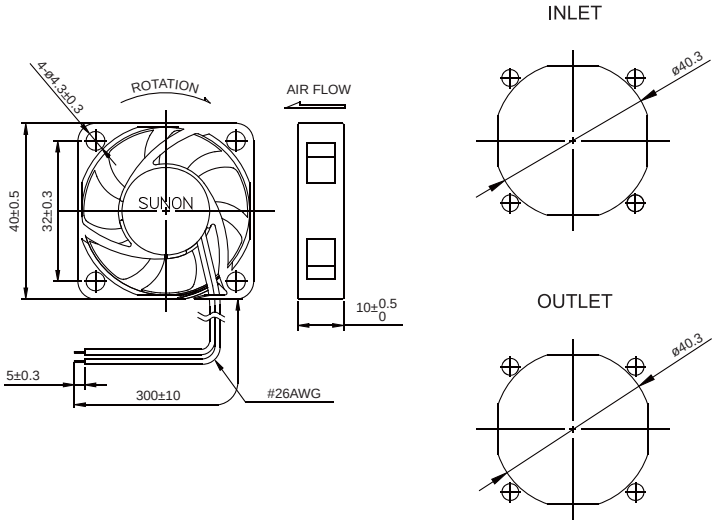

*All model could be customized. Please contact with Sunon Sales

Beijing Hengrui Mechanical and Electrical Equipment Co,Ltd
+86 10-62547612
zhangyu@bjhengrui.cn
en.bjhengrui.com

40x40x10 mm

5.4 CFM

Specifications

MAGLev by SUNON	Bearing	Rating Voltage	Power Current	Power Consumption	Speed	Air Flow	Static Pressure	Noise	Weight	Curve
	● VAPO	(VDC)	(mA)	(WATTS)	(RPM)	(CFM)	(inch-H_2O)	(dB(A))	(g)	
HA40101V4-1000U-A99	●	12	31	0.38	5000	5.4	0.09	15.7	15.4	1

Air Flow-Static Pressure Characteristics

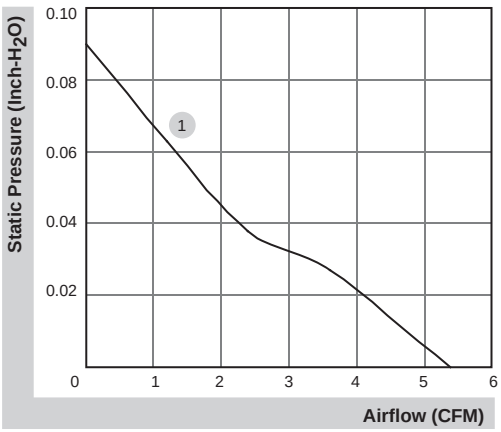

External dimensions(mm)

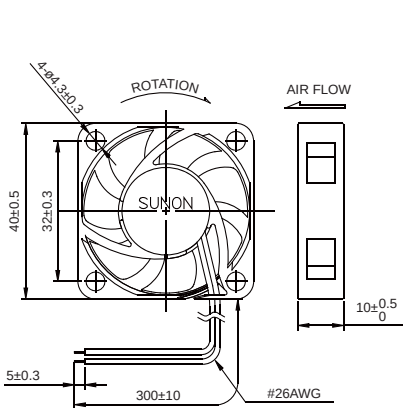

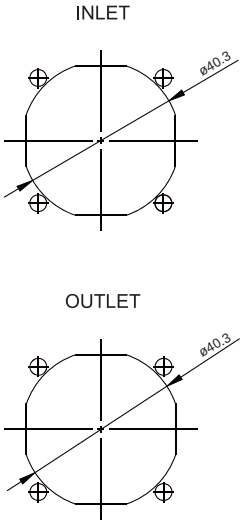

*All model could be customized. Please contact with Sunon Sales

Beijing Hengrui Mechanical and Electrical Equipment Co,Ltd
+86 10-62547612
zhangyu@bjhengrui.cn
en.bjhengrui.com

40x40x10 mm

7.0~8.0 CFM

Specifications

Model	Bearing	Rating Voltage	Power Current	Power Consumption	Speed	Air Flow	Static Pressure	Noise	Weight	Curve
	◐ 2BALL ○ Sleeve	(VDC)	(mA)	(WATTS)	(RPM)	(CFM)	(inch-H_2O)	(dB(A))	(g)	
EE40100S1-000U-999	○	5	235	1.18	7000	8.0	0.19	32.0	13.5	1
EB40100S2-000U-999	○	5	205	1.00	5800	7.0	0.13	27.0	17.0	2
EE40101S1-000U-999	○	12	100	1.20	7000	8.0	0.19	32.0	13.5	1
EB40101S2-000U-999	○	12	90	1.08	5800	7.0	0.13	27.0	17.0	2

Air Flow-Static Pressure Characteristics

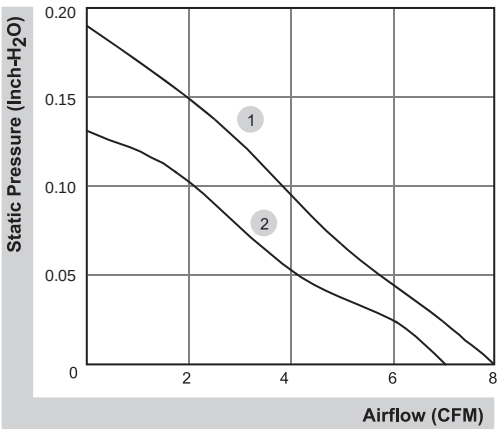

External dimensions(mm)

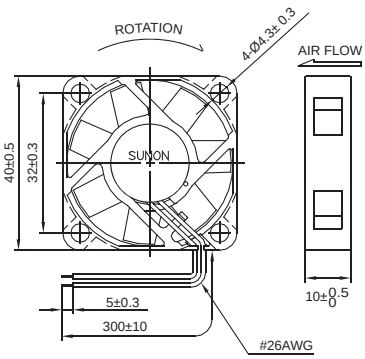

INLET

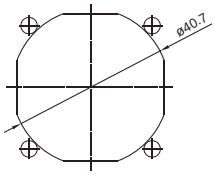

OUTLET

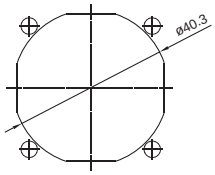

*All model could be customized. Please contact with Sunon Sales

Beijing Hengrui Mechanical and Electrical Equipment Co,Ltd
+86 10-62547612
zhangyu@bjhengrui.cn
en.bjhengrui.com