40x40x10 mm

7.0~9.9 CFM

Specification

MAGLev by SUNON	Bearing	Rated Voltage	Power Current	Power Consumption	Speed	Airflow	Static Pressure	Noise	Weight	Curve
	● VAPO	(VDC)	(mA)	(WATTS)	(RPM)	(CFM)	(inch-H_2O)	(dB(A))	(g)	
MF40100V1-10000-A99	●	5	136	0.68	7000	8.0	0.19	27.3	15.6	2
MF40100V2-10000-A99	●	5	94	0.47	5800	7.0	0.12	20.6	15.6	3
MF40101VX-10000-A99	●	12	87	1.05	8500	9.9	0.25	31.4	15.6	1
MF40101V1-10000-A99	●	12	51	0.62	7000	8.0	0.19	27.3	15.6	2
MF40101V2-10000-A99	●	12	40	0.48	5800	7.0	0.12	20.6	15.6	3

Function R Type : F99 ／ F Type : G99

Air Flow-Static Pressure Characteristics

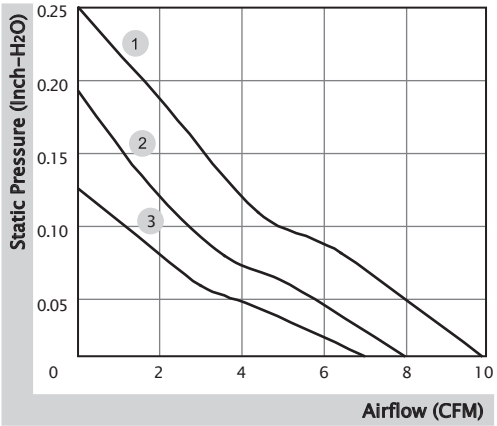

External Dimensions(mm)

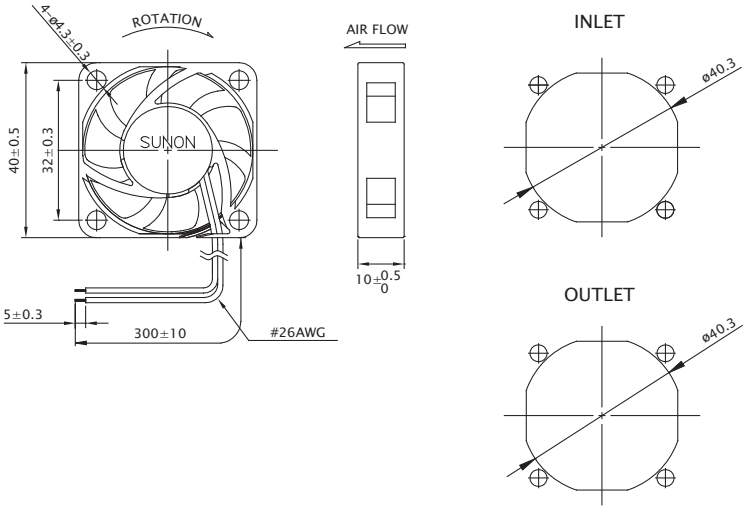

Beijing Hengrui Mechanical and Electrical Equipment Co,Ltd
+86 10-62547612
zhangyu@bjhengrui.cn
en.bjhengrui.com

40x40x10 mm

5.5~10.0 CFM

Specification

Model	Bearing	Rated Voltage	Power Current	Power Consumption	Speed	Airflow	Static Pressure	Noise	Weight	Curve
	◉ 2BALL ○ Sleeve	(VDC)	(mA)	(WATTS)	(RPM)	(CFM)	(inch-H_2O)	(dB(A))	(g)	
EF40101BX-10000-A99	◉	12	122	1.47	9000	10.0	0.27	33.7	15.8	1
EF40101B1-10000-A99	◉	12	82	0.99	7000	8.0	0.19	27.3	15.8	2
EF40101B2-10000-A99	◉	12	37	0.45	5000	5.5	0.10	17.7	15.8	3

Function R Type : F99 ／ F Type : G99

Air Flow-Static Pressure Characteristics

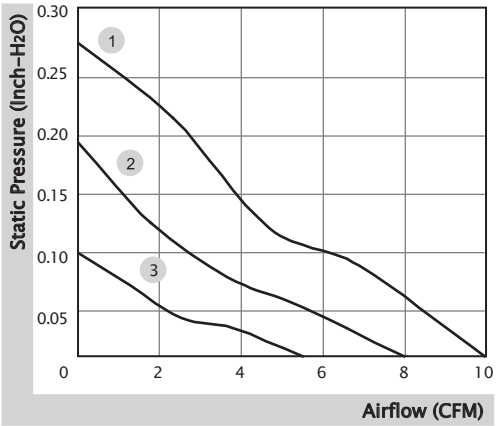

External Dimensions(mm)

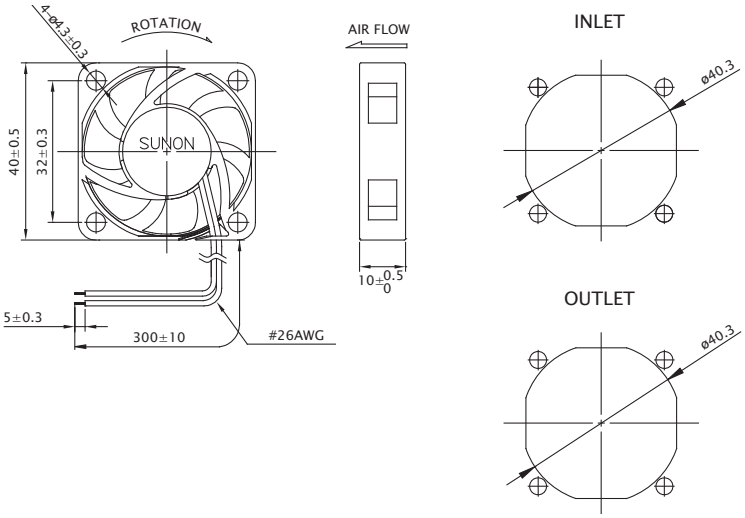

Beijing Hengrui Mechanical and Electrical Equipment Co,Ltd
+86 10-62547612
zhangyu@bjhengrui.cn
en.bjhengrui.com

40x40x10 mm

5.4 CFM

Specification

MAGLev by SUNON	Bearing	Rated Voltage	Power Current	Power Consumption	Speed	Airflow	Static Pressure	Noise	Weight	Curve
	● VAPO	(VDC)	(mA)	(WATTS)	(RPM)	(CFM)	(inch-H_2O)	(dB(A))	(g)	
HA40101V4-10000-A99	●	12	31	0.38	5000	5.4	0.09	15.7	15.4	1

Function F Type : G99

Air Flow-Static Pressure Characteristics

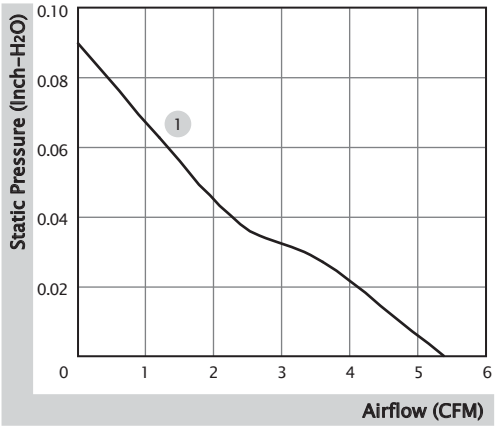

External Dimensions(mm)

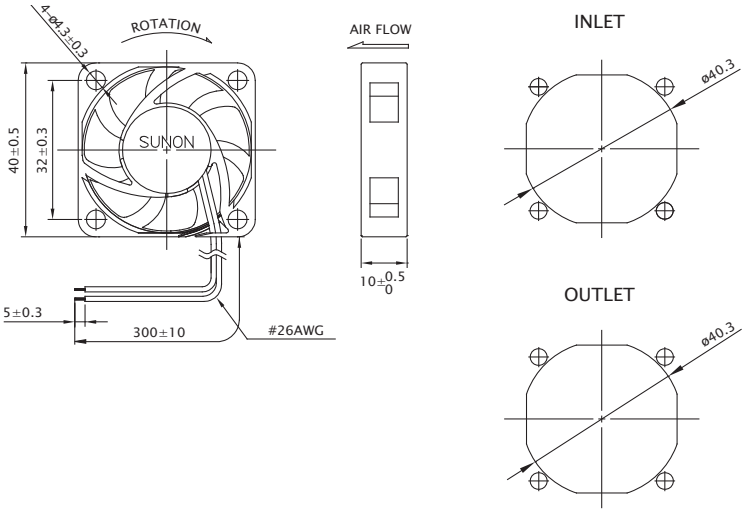

Beijing Hengrui Mechanical and Electrical Equipment Co,Ltd
+86 10-62547612
zhangyu@bjhengrui.cn
en.bjhengrui.com