# 40x40x10 mm

## 5.5~9.9 CFM

### Specifications

| MAGLev by SUNON | Bearing | Rating Voltage | Power Current | Power Consumption | Speed | Air Flow | Static Pressure | Noise | Weight | Curve |
|---|---|---|---|---|---|---|---|---|---|---|
| | ● VAPO | (VDC) | (mA) | (WATTS) | (RPM) | (CFM) | (inch-$H_2O$) | (dB(A)) | (g) | |
| MF40100V1-1000U-A99 | ● | 5 | 136 | 0.68 | 7000 | 8.0 | 0.19 | 27.3 | 15.6 | 4 |
| MF40100V2-1000U-A99 | ● | 5 | 94 | 0.47 | 5800 | 7.0 | 0.12 | 20.6 | 15.6 | 5 |
| MF40101VX-1000U-A99 | ● | 12 | 87 | 1.05 | 8500 | 9.9 | 0.25 | 31.4 | 15.6 | 2 |
| MF40101V1-1000U-A99 | ● | 12 | 51 | 0.62 | 7000 | 8.0 | 0.19 | 27.3 | 15.6 | 4 |
| MF40101V2-1000U-A99 | ● | 12 | 40 | 0.48 | 5800 | 7.0 | 0.12 | 20.6 | 15.6 | 5 |

| Model | Bearing | Rating Voltage | Power Current | Power Consumption | Speed | Air Flow | Static Pressure | Noise | Weight | Curve |
|---|---|---|---|---|---|---|---|---|---|---|
| | ◐ 2BALL ○ Sleeve | (VDC) | (mA) | (WATTS) | (RPM) | (CFM) | (inch-$H_2O$) | (dB(A)) | (g) | |
| EF40101BX-1000U-A99 | ◐ | 12 | 122 | 1.47 | 9000 | 10.0 | 0.27 | 33.7 | 15.8 | 1 |
| EF40101B1-1000U-A99 | ◐ | 12 | 82 | 0.99 | 7000 | 8.0 | 0.19 | 27.3 | 15.8 | 3 |
| EF40101B2-1000U-A99 | ◐ | 12 | 37 | 0.45 | 5000 | 5.5 | 0.10 | 17.7 | 15.8 | 6 |

### Air Flow-Static Pressure Characteristics

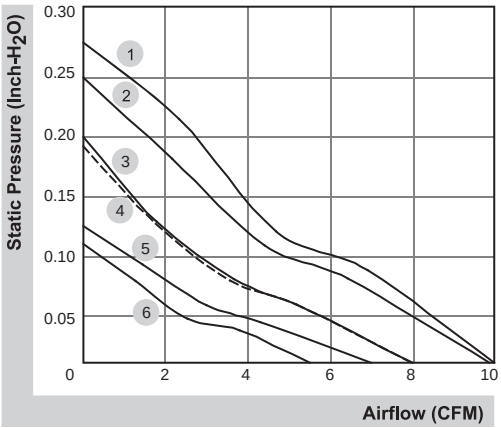


### External dimensions(mm)

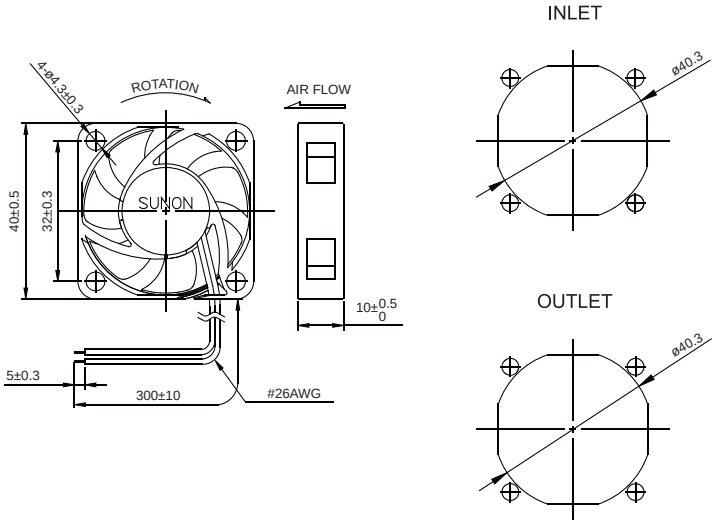


*All model could be customized. Please contact with Sunon Sales

Beijing Hengrui Mechanical and Electrical Equipment Co,Ltd
+86 10-62547612
zhangyu@bjhengrui.cn
en.bjhengrui.com

# 40x40x10 mm

## 5.4 CFM

## Specifications

| MAGLev by SUNON | Bearing | Rating Voltage | Power Current | Power Consumption | Speed | Air Flow | Static Pressure | Noise | Weight | Curve |
|---|---|---|---|---|---|---|---|---|---|---|
| | ● VAPO | (VDC) | (mA) | (WATTS) | (RPM) | (CFM) | (inch-$H_2O$) | (dB(A)) | (g) | |
| HA40101V4-1000U-A99 | ● | 12 | 31 | 0.38 | 5000 | 5.4 | 0.09 | 15.7 | 15.4 | 1 |

## Air Flow-Static Pressure Characteristics

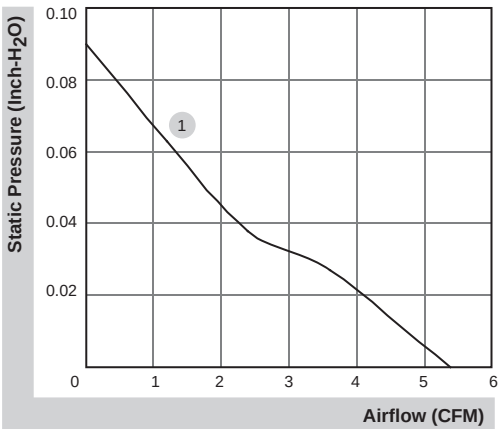


## External dimensions(mm)

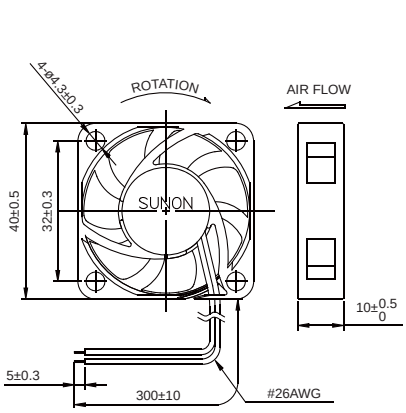


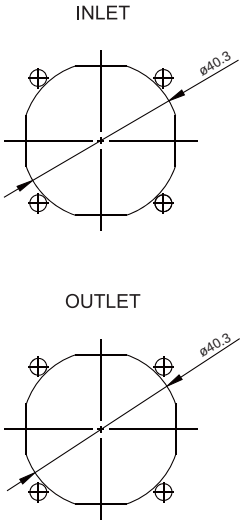


*All model could be customized. Please contact with Sunon Sales

Beijing Hengrui Mechanical and Electrical Equipment Co,Ltd
+86 10-62547612
zhangyu@bjhengrui.cn
en.bjhengrui.com

# 40x40x10 mm

## 7.0~8.0 CFM

### Specifications

| Model | Bearing | Rating Voltage | Power Current | Power Consumption | Speed | Air Flow | Static Pressure | Noise | Weight | Curve |
|---|---|---|---|---|---|---|---|---|---|---|
| | ◐ 2BALL<br>○ Sleeve | (VDC) | (mA) | (WATTS) | (RPM) | (CFM) | (inch-$H_2O$) | (dB(A)) | (g) | |
| EE40100S1-000U-999 | ○ | 5 | 235 | 1.18 | 7000 | 8.0 | 0.19 | 32.0 | 13.5 | 1 |
| EB40100S2-000U-999 | ○ | 5 | 205 | 1.00 | 5800 | 7.0 | 0.13 | 27.0 | 17.0 | 2 |
| EE40101S1-000U-999 | ○ | 12 | 100 | 1.20 | 7000 | 8.0 | 0.19 | 32.0 | 13.5 | 1 |
| EB40101S2-000U-999 | ○ | 12 | 90 | 1.08 | 5800 | 7.0 | 0.13 | 27.0 | 17.0 | 2 |

### Air Flow-Static Pressure Characteristics

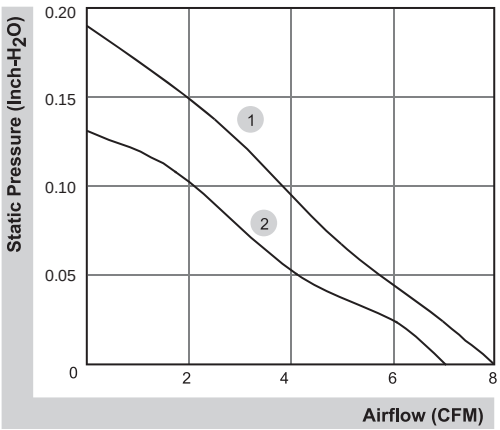


### External dimensions(mm)

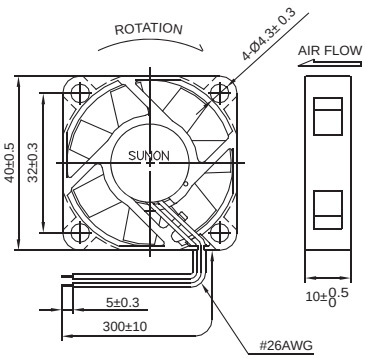


INLET

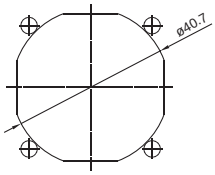


OUTLET

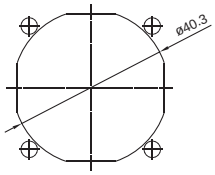


*All model could be customized. Please contact with Sunon Sales

Beijing Hengrui Mechanical and Electrical Equipment Co,Ltd
+86 10-62547612
zhangyu@bjhengrui.cn
en.bjhengrui.com