40x40x20 mm

6.3~10.8 CFM

Specifications

MAGLev by SUNON	Bearing	Rating Voltage	Power Current	Power Consumption	Speed	Air Flow	Static Pressure	Noise	Weight	Curve
	● VAPO	(VDC)	(mA)	(WATTS)	(RPM)	(CFM)	(inch-H_2O)	(dB(A))	(g)	
MF40200V1-1000U-A99	●	5	150	0.75	7000	8.9	0.22	25.5	29.0	2
MF40200V2-1000U-A99	●	5	107	0.54	6000	7.7	0.17	21.0	29.0	3
MF40200V3-1000U-A99	●	5	75	0.38	5000	6.3	0.11	16.5	29.0	4
MF40201VX-1000U-A99	●	12	80	0.96	8000	10.8	0.29	27.5	29.0	1
MF40201V1-1000U-A99	●	12	58	0.70	7000	8.9	0.22	25.5	29.0	2
MF40201V2-1000U-A99	●	12	45	0.54	6000	7.7	0.17	21.0	29.0	3
MF40201V3-1000U-A99	●	12	38	0.46	5000	6.3	0.11	16.5	29.0	4
MF40202VX-1000U-A99	●	24	39	0.94	8000	10.8	0.29	27.5	29.0	1
MF40202V1-1000U-A99	●	24	32	0.77	7000	8.9	0.22	25.5	29.0	2
MF40202V2-1000U-A99	●	24	25	0.60	6000	7.7	0.17	21.0	29.0	3

Air Flow-Static Pressure Characteristics

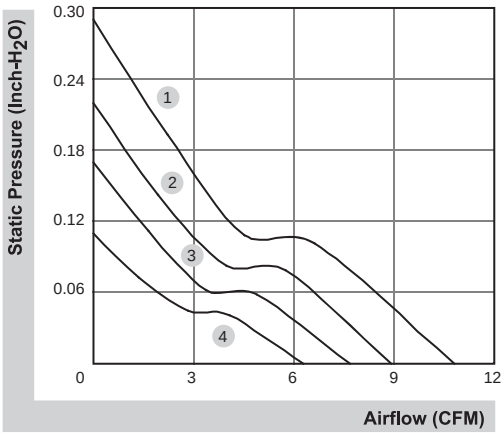

External dimensions(mm)

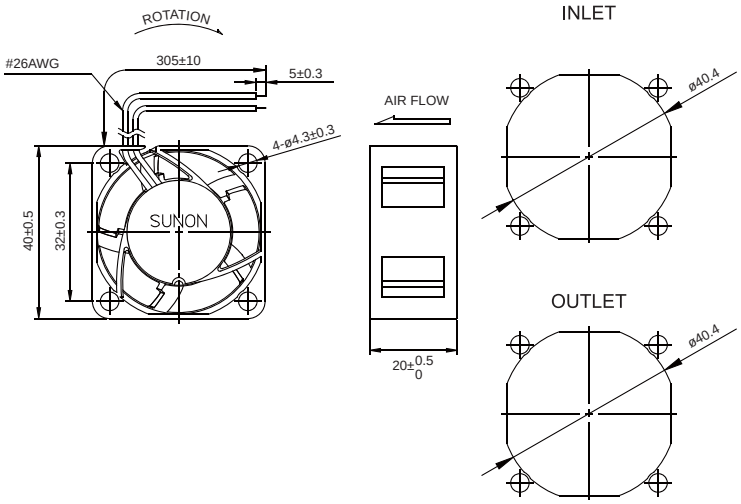

*All model could be customized. Please contact with Sunon Sales

Beijing Hengrui Mechanical and Electrical Equipment Co,Ltd
+86 10-62547612
zhangyu@bjhengrui.cn
en.bjhengrui.com

40x40x20 mm

6.3~10.8 CFM

Specifications

Model	Bearing	Rating Voltage	Power Current	Power Consumption	Speed	Air Flow	Static Pressure	Noise	Weight	Curve
	◐ 2BALL ○ Sleeve	(VDC)	(mA)	(WATTS)	(RPM)	(CFM)	(inch-H_2O)	(dB(A))	(g)	
EB40200S1-000U-999	○	5	218	1.09	7200	8.9	0.21	25.5	30.0	2
EB40200S2-000U-999	○	5	140	0.70	6200	7.7	0.16	21.0	30.0	3
EB40200S3-000U-999	○	5	100	0.50	5200	6.3	0.11	18.0	30.0	4
EB40201SX-000U-999	○	12	120	1.44	8200	10.8	0.27	27.5	31.0	1
EB40201S1-000U-999	○	12	90	1.08	7200	8.9	0.21	25.5	31.0	2
EB40201S2-000U-999	○	12	63	0.76	6200	7.7	0.16	21.0	31.0	3
EB40201S3-000U-999	○	12	45	0.54	5200	6.3	0.11	18.0	31.0	4
EB40202S1-000U-999	○	24	54	1.30	7200	8.9	0.21	25.5	31.0	2
EB40202S2-000U-999	○	24	33	0.80	6200	7.7	0.16	21.0	31.0	3

Air Flow-Static Pressure Characteristics

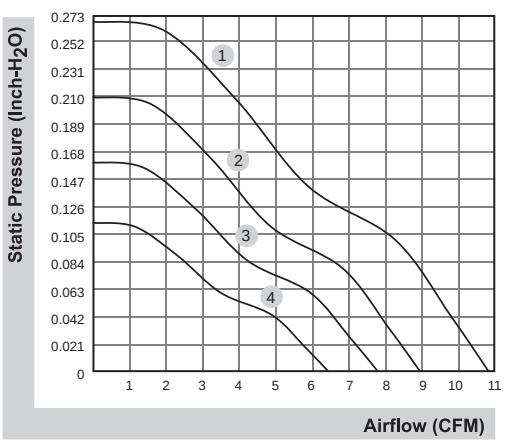

External dimensions(mm)

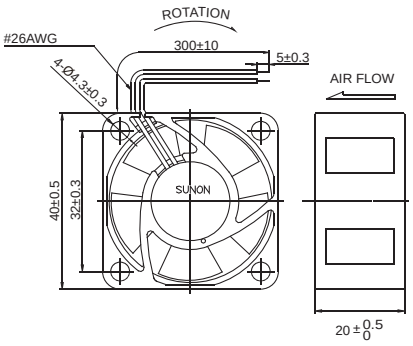

INLET

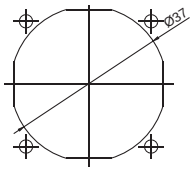

OUTLET

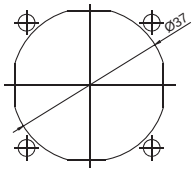

*All model could be customized. Please contact with Sunon Sales

Beijing Hengrui Mechanical and Electrical Equipment Co,Ltd
+86 10-62547612
zhangyu@bjhengrui.cn
en.bjhengrui.com

40x40x20 mm

6.3~10.8 CFM

Specifications

Model	Bearing	Rating Voltage	Power Current	Power Consumption	Speed	Air Flow	Static Pressure	Noise	Weight	Curve
	◐ 2BALL ○ Sleeve	(VDC)	(mA)	(WATTS)	(RPM)	(CFM)	(inch-H_2O)	(dB(A))	(g)	
EF40201BX-000U-A99	◐	12	53	0.64	6800	10.8	0.27	28.5	32.5	1
EF40201B1-000U-A99	◐	12	46	0.56	6300	8.9	0.22	26.5	32.5	2
EF40201B2-000U-A99	◐	12	38	0.46	5400	7.7	0.16	22.0	32.5	3
EF40201B3-000U-A99	◐	12	34	0.41	5000	6.3	0.14	19.0	32.5	4

Air Flow-Static Pressure Characteristics

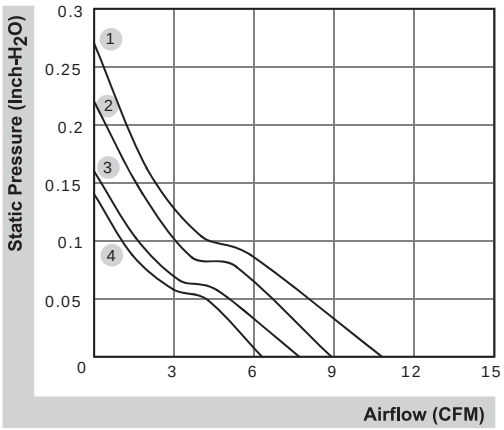

External dimensions(mm)

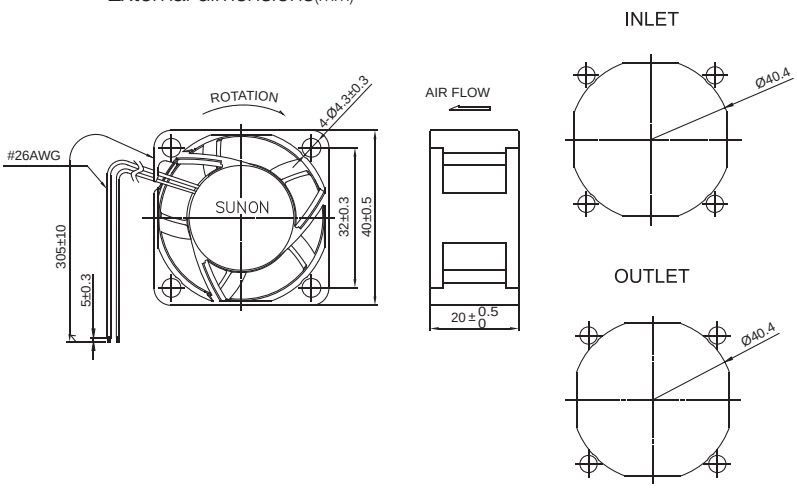

*All model could be customized. Please contact with Sunon Sales

Beijing Hengrui Mechanical and Electrical Equipment Co,Ltd
+86 10-62547612
zhangyu@bjhengrui.cn
en.bjhengrui.com