40x40x20 mm

6.3~10.8 CFM

Specification

MAGLev by SUNON	Bearing	Rated Voltage	Power Current	Power Consumption	Speed	Airflow	Static Pressure	Noise	Weight	Curve
	● VAPO	(VDC)	(mA)	(WATTS)	(RPM)	(CFM)	(inch-H_2O)	(dB(A))	(g)	
MF40200V1-10000-A99	●	5	150	0.75	7000	8.9	0.22	25.5	29.0	2
MF40200V2-10000-A99	●	5	107	0.54	6000	7.7	0.17	21.0	29.0	3
MF40200V3-10000-A99	●	5	75	0.38	5000	6.3	0.11	16.5	29.0	4
MF40201VX-10000-A99	●	12	80	0.96	8000	10.8	0.29	27.5	29.0	1
MF40201V1-10000-A99	●	12	58	0.70	7000	8.9	0.22	25.5	29.0	2
MF40201V2-10000-A99	●	12	45	0.54	6000	7.7	0.17	21.0	29.0	3
MF40201V3-10000-A99	●	12	38	0.46	5000	6.3	0.11	16.5	29.0	4
MF40202VX-10000-A99	●	24	39	0.94	8000	10.8	0.29	27.5	29.0	1
MF40202V1-10000-A99	●	24	32	0.77	7000	8.9	0.22	25.5	29.0	2
MF40202V2-10000-A99	●	24	25	0.60	6000	7.7	0.17	21.0	29.0	3

Function (MF Series) R Type : F99 ／ F Type : G99

Air Flow-Static Pressure Characteristics

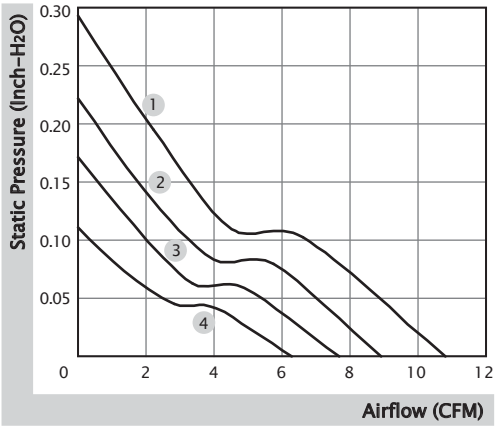

External Dimensions(mm)

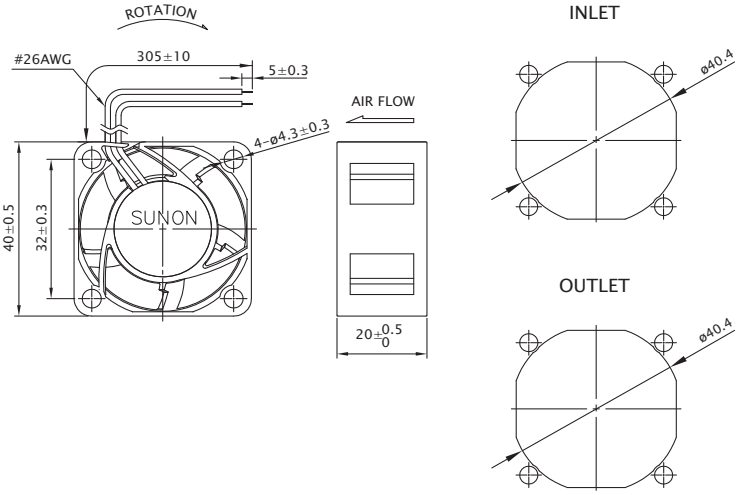

Beijing Hengrui Mechanical and Electrical Equipment Co,Ltd
+86 10-62547612
zhangyu@bjhengrui.cn
en.bjhengrui.com

40x40x20 mm

6.3~10.8 CFM

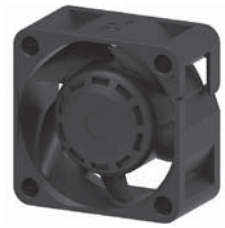

Specification

MAGLev by SUNON	Bearing	Rated Voltage	Power Current	Power Consumption	Speed	Airflow	Static Pressure	Noise	Weight	Curve
	● VAPO	(VDC)	(mA)	(WATTS)	(RPM)	(CFM)	(inch-H_2O)	(dB(A))	(g)	
EF40201BX-10000-A99	●	12	65	0.78	8200	10.8	0.32	28.5	32.5	1
EF40201B1-10000-A99	●	12	55	0.66	7200	8.9	0.24	24.5	32.5	2
EF40201B2-10000-A99	●	12	40	0.48	6200	7.7	0.18	21.3	32.5	3
EF40201B3-10000-A99	●	12	35	0.42	5200	6.3	0.14	16.2	32.5	4

Function

R Type : F99 ／ F Type : G99 ／ PWM : H99, Q99, S99

Air Flow-Static Pressure Characteristics

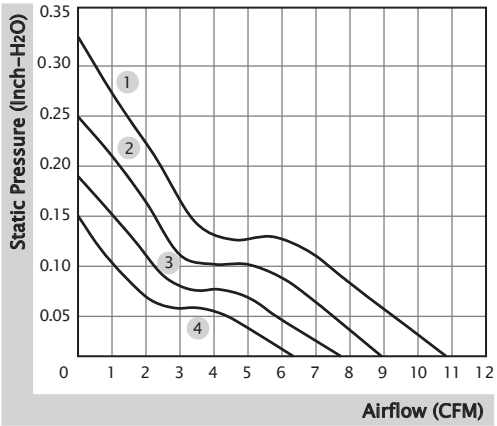

External Dimensions(mm)

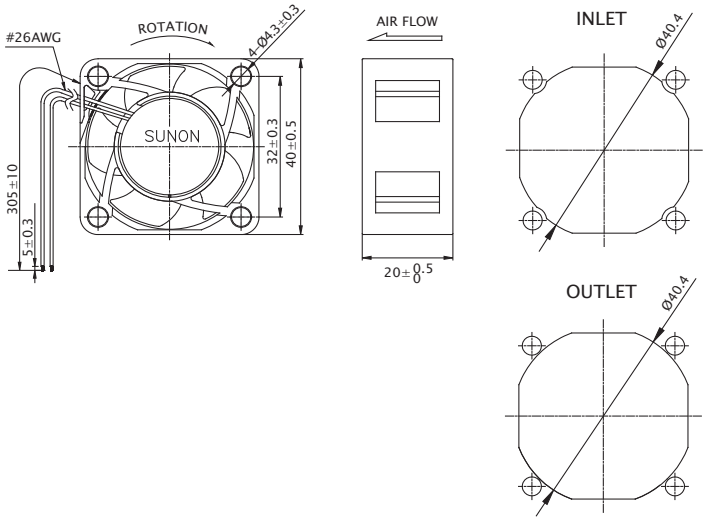

Beijing Hengrui Mechanical and Electrical Equipment Co,Ltd
+86 10-62547612
zhangyu@bjhengrui.cn
en.bjhengrui.com

40x40x20 mm

5.5 CFM

Specification

MAGLev by SUNON	Bearing	Rated Voltage	Power Current	Power Consumption	Speed	Airflow	Static Pressure	Noise	Weight	Curve
	● VAPO	(VDC)	(mA)	(WATTS)	(RPM)	(CFM)	(inch-H_2O)	(dB(A))	(g)	
HA40201V4-10000-A99	●	12	31	0.38	4500	5.5	0.10	12.3	30.6	1

Function F Type : G99

Air Flow-Static Pressure Characteristics

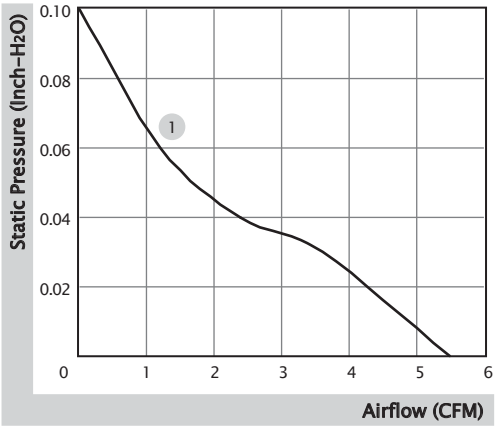

External Dimensions(mm)

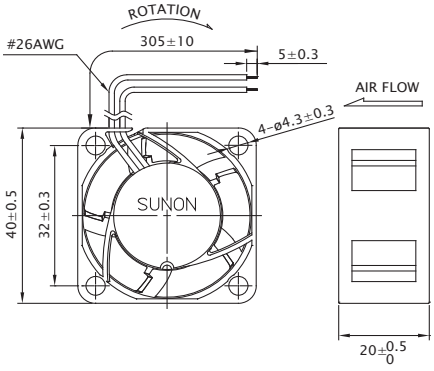

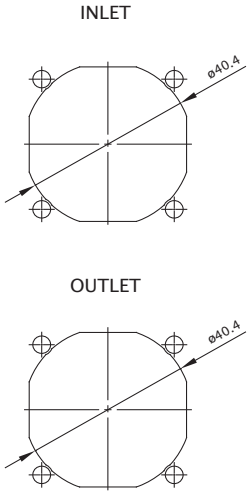

Beijing Hengrui Mechanical and Electrical Equipment Co,Ltd
+86 10-62547612
zhangyu@bjhengrui.cn
en.bjhengrui.com