50x50x10 mm

8.4~13.8 CFM

Specifications

MAGLev by SUNON	Bearing	Rating Voltage	Power Current	Power Consumption	Speed	Air Flow	Static Pressure	Noise	Weight	Curve
	● VAPO	(VDC)	(mA)	(WATTS)	(RPM)	(CFM)	(inch-H_2O)	(dB(A))	(g)	
MF50100V1-1000U-A99	●	5	155	0.78	5800	13.8	0.15	30.7	19.5	1
MF50100V2-1000U-A99	●	5	85	0.43	4800	11.0	0.11	25.6	19.5	3
MF50100V3-1000U-A99	●	5	75	0.38	4300	8.4	0.08	22.4	19.5	4
MF50101V1-1000U-A99	●	12	70	0.84	5800	13.8	0.15	30.7	19.5	1
MF50101V2-1000U-A99	●	12	50	0.60	4800	11.0	0.11	25.6	19.5	3
MF50101V3-1000U-A99	●	12	37	0.45	4300	8.4	0.08	22.4	19.5	4

Model	Bearing	Rating Voltage	Power Current	Power Consumption	Speed	Air Flow	Static Pressure	Noise	Weight	Curve
	◐ 2BALL ○ Sleeve	(VDC)	(mA)	(WATTS)	(RPM)	(CFM)	(inch-H_2O)	(dB(A))	(g)	
EE50101S1-1000U-999	○	12	90	1.08	5700	13.0	0.14	30.7	19.5	2
EE50101S2-1000U-999	○	12	75	0.90	4700	11.0	0.11	25.6	19.5	3

Air Flow-Static Pressure Characteristics

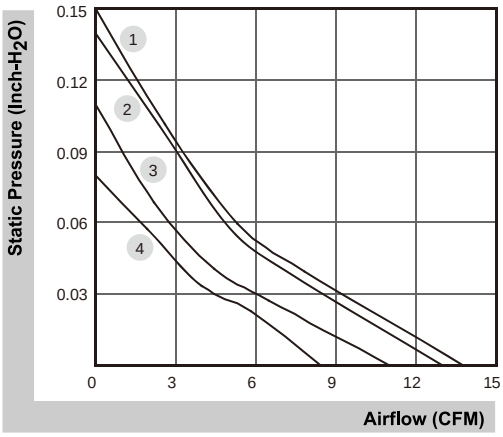

External dimensions(mm)

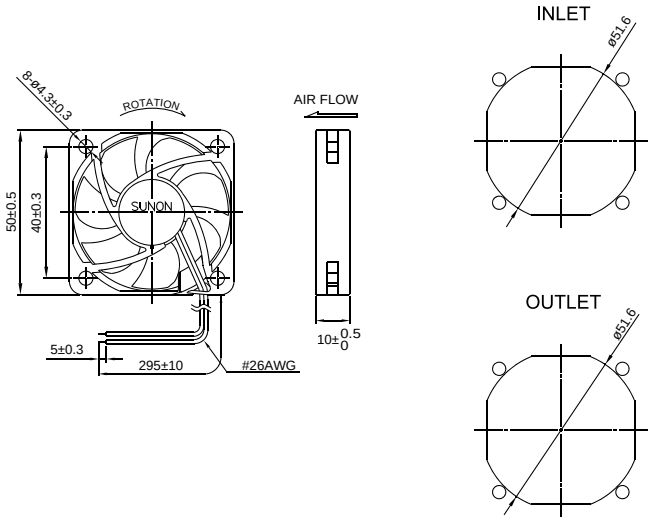

*All model could be customized. Please contact with Sunon Sales

Beijing Hengrui Mechanical and Electrical Equipment Co,Ltd
+86 10-62547612
zhangyu@bjhengrui.cn
en.bjhengrui.com

50x50x15 mm

10.2~18.6 CFM

Specifications

MAGLev by SUNON	Bearing	Rating Voltage	Power Current	Power Consumption	Speed	Air Flow	Static Pressure	Noise	Weight	Curve
	● VAPO	(VDC)	(mA)	(WATTS)	(RPM)	(CFM)	(inch-H_2O)	(dB(A))	(g)	
MF50151VX-1000U-A99	●	12	100	1.20	7200	18.6	0.31	38.1	33.0	1
MF50151V1-1000U-A99	●	12	66	0.80	6100	17.0	0.23	33.0	33.0	2
MF50151V2-1000U-A99	●	12	42	0.51	5000	13.0	0.17	29.0	33.0	3
MF50151V3-1000U-A99	●	12	28	0.34	3800	10.2	0.12	20.1	33.0	4
MF50152VX-1000U-A99	●	24	55	1.32	7200	18.6	0.31	38.1	33.0	1
MF50152V1-1000U-A99	●	24	42	1.01	6100	17.0	0.23	33.0	33.0	2
MF50152V2-1000U-A99	●	24	27	0.65	5000	13.0	0.17	29.0	33.0	3

Air Flow-Static Pressure Characteristics

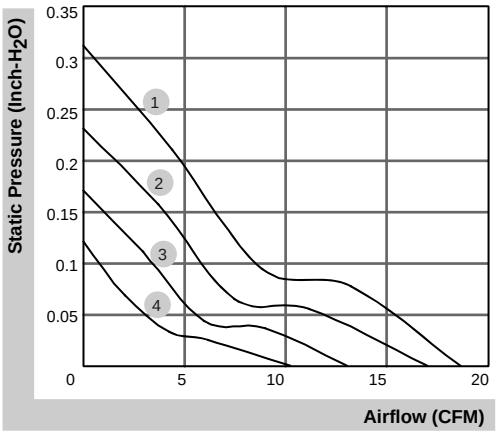

External dimensions(mm)

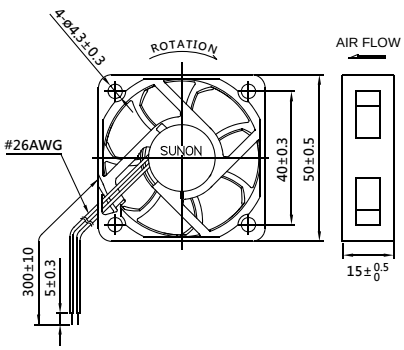

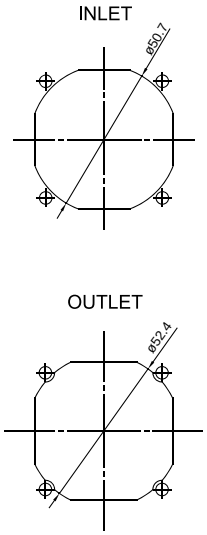

*All model could be customized. Please contact with Sunon Sales

Beijing Hengrui Mechanical and Electrical Equipment Co,Ltd
+86 10-62547612
zhangyu@bjhengrui.cn
en.bjhengrui.com

50x50x15 mm

7.7 CFM

Specifications

MAGLev by SUNON	Bearing	Rating Voltage	Power Current	Power Consumption	Speed	Air Flow	Static Pressure	Noise	Weight	Curve
	● VAPO	(VDC)	(mA)	(WATTS)	(RPM)	(CFM)	(inch-H_2O)	(dB(A))	(g)	
HA50151V4-1000U-A99	●	12	25	0.30	3200	7.7	0.07	15.4	33.0	1

Air Flow-Static Pressure Characteristics

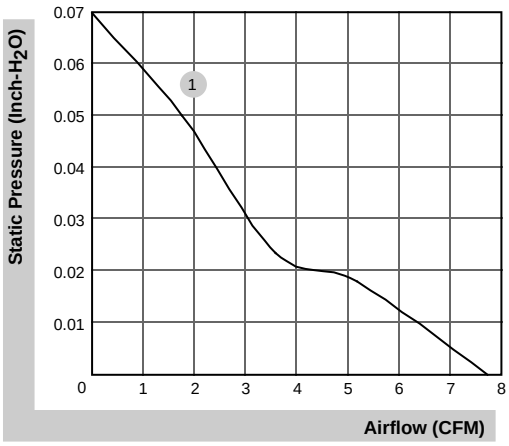

External dimensions(mm)

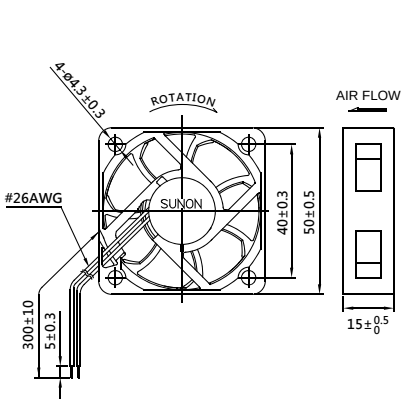

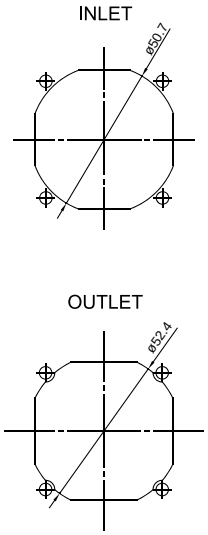

*All model could be customized. Please contact with Sunon Sales

Beijing Hengrui Mechanical and Electrical Equipment Co,Ltd
+86 10-62547612
zhangyu@bjhengrui.cn
en.bjhengrui.com