50x50x15 mm

2.6~5.4 CFM

Specifications

MAGLev by SUNON	Bearing	Rating Voltage	Power Current	Power Consumption	Speed	Air Flow	Static Pressure	Noise	Weight	Curve
	● VAPO	(VDC)	(mA)	(WATTS)	(RPM)	(CFM)	(inch-H_2O)	(dB(A))	(g)	
MF50151VX-B00U-A99	●	12	170	2.04	6000	5.4	0.97	42.2	30.0	1
MF50151V1-B00U-A99	●	12	100	1.20	5000	4.5	0.67	39.8	30.0	2
MF50151V2-B00U-A99	●	12	56	0.68	4000	3.5	0.40	33.1	30.0	3
MF50151V3-B00U-A99	●	12	34	0.41	3000	2.6	0.18	23.4	30.0	4

Air Flow-Static Pressure Characteristics

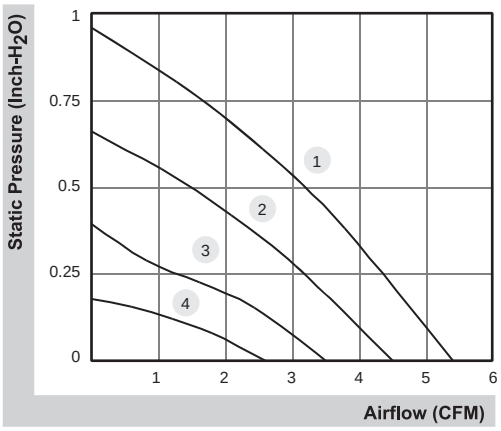

External dimensions (mm)

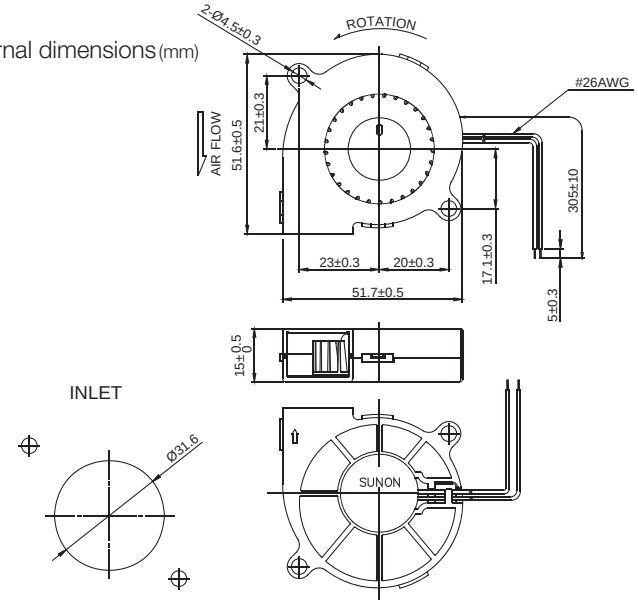

*All model could be customized. Please contact with Sunon Sales

Beijing Hengrui Mechanical and Electrical Equipment Co,Ltd
+86 10-62547612
zhangyu@bjhengrui.cn
en.bjhengrui.com

50x50x20 mm

4.8~5.7 CFM

Specifications

MAGLev by SUNON	Bearing	Rating Voltage	Power Current	Power Consumption	Speed	Air Flow	Static Pressure	Noise	Weight	Curve
	● VAPO	(VDC)	(mA)	(WATTS)	(RPM)	(CFM)	(inch-H_2O)	(dB(A))	(g)	
GB1205PKV1-8AY GN	●	12	124	1.5	5200	5.7	0.66	35.0	33.0	1
GB1205PKV2-8AY GN	●	12	104	1.3	4800	5.2	0.56	33.0	33.0	2
GB1205PKV3-8AY GN	●	12	88	1.1	4400	4.8	0.46	30.0	33.0	3

Air Flow-Static Pressure Characteristics

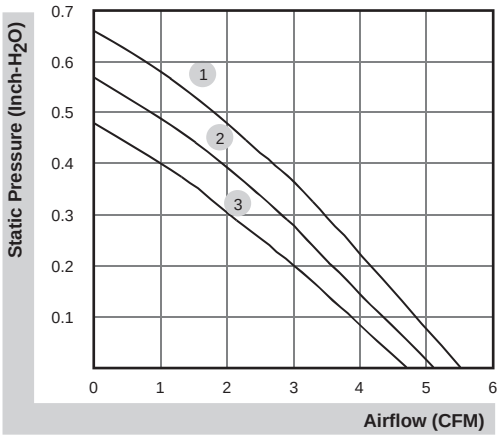

External dimensions(mm)

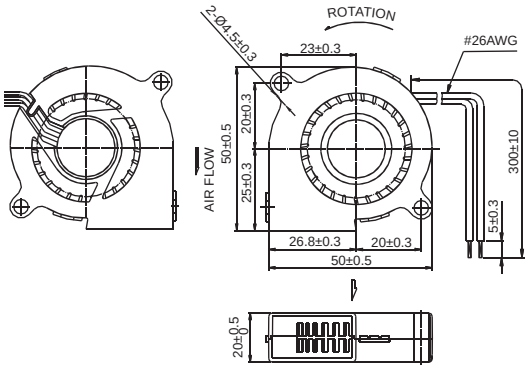

*All model could be customized. Please contact with Sunon Sales

Beijing Hengrui Mechanical and Electrical Equipment Co,Ltd
+86 10-62547612
zhangyu@bjhengrui.cn
en.bjhengrui.com

60x60x15 mm

3.9~5.7 CFM

Specifications

MAGLev by SUNON	Bearing	Rating Voltage	Power Current	Power Consumption	Speed	Air Flow	Static Pressure	Noise	Weight	Curve
	● VAPO	(VDC)	(mA)	(WATTS)	(RPM)	(CFM)	(inch-H_2O)	(dB(A))	(g)	
MF60151V1-B00U-A99	●	12	90	1.08	5000	5.7	0.44	40.2	36.0	1
MF60151V2-B00U-A99	●	12	67	0.81	4400	5.1	0.33	36.0	36.0	2
MF60151V3-B00U-A99	●	12	40	0.48	3400	3.9	0.19	28.8	36.0	3

Air Flow-Static Pressure Characteristics

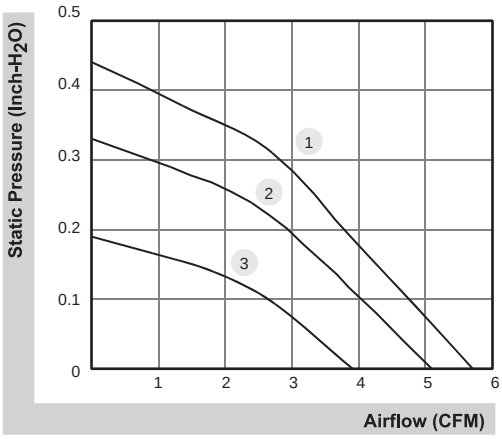

External dimensions (mm)

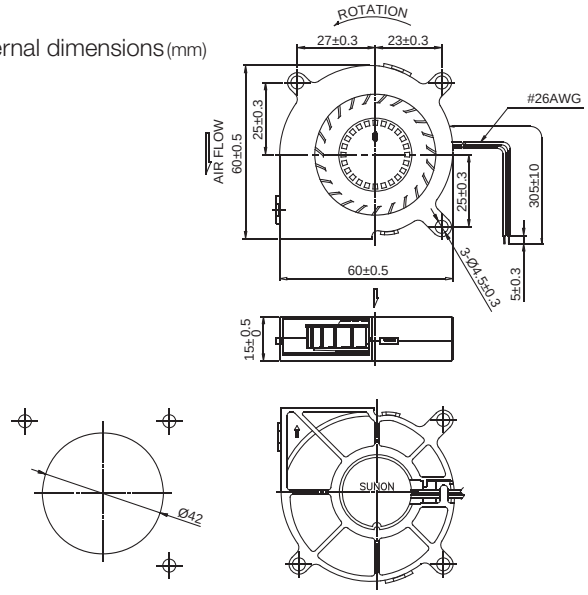

*All model could be customized. Please contact with Sunon Sales

Beijing Hengrui Mechanical and Electrical Equipment Co,Ltd
+86 10-62547612
zhangyu@bjhengrui.cn
en.bjhengrui.com