50x50x15 mm

10.2~18.6 CFM

Specifications

MAGLev by SUNON	Bearing	Rating Voltage	Power Current	Power Consumption	Speed	Air Flow	Static Pressure	Noise	Weight	Curve
	● VAPO	(VDC)	(mA)	(WATTS)	(RPM)	(CFM)	(inch-H_2O)	(dB(A))	(g)	
MF50151VX-1000U-A99	●	12	110	1.32	7200	18.6	0.31	38.1	33.0	1
MF50151V1-1000U-A99	●	12	72	0.87	6100	17.0	0.23	33.0	33.0	2
MF50151V2-1000U-A99	●	12	45	0.54	5000	13.0	0.17	29.0	33.0	3
MF50151V3-1000U-A99	●	12	35	0.42	3800	10.2	0.12	20.1	33.0	4
MF50152VX-1000U-A99	●	24	55	1.32	7200	18.6	0.31	38.1	33.0	1
MF50152V1-1000U-A99	●	24	42	1.01	6100	17.0	0.23	33.0	33.0	2
MF50152V2-1000U-A99	●	24	27	0.65	5000	13.0	0.17	29.0	33.0	3

Air Flow-Static Pressure Characteristics

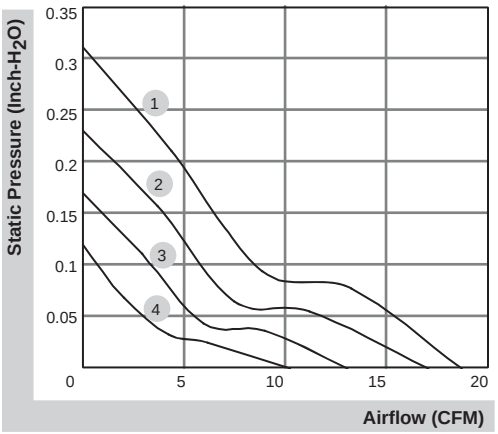

External dimensions(mm)

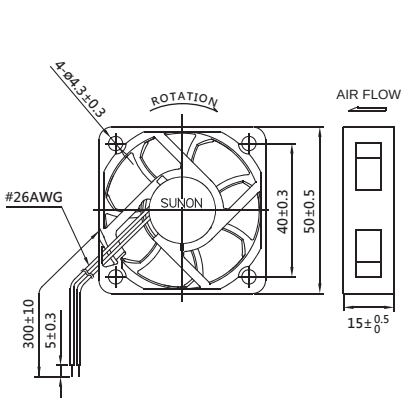

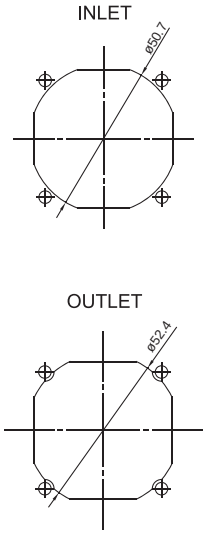

*All model could be customized. Please contact with Sunon Sales

Beijing Hengrui Mechanical and Electrical Equipment Co,Ltd
+86 10-62547612
zhangyu@bjhengrui.cn
en.bjhengrui.com

50x50x15 mm

7.7 CFM

Specifications

MAGLev by SUNON	Bearing	Rating Voltage	Power Current	Power Consumption	Speed	Air Flow	Static Pressure	Noise	Weight	Curve
	● VAPO	(VDC)	(mA)	(WATTS)	(RPM)	(CFM)	(inch-H_2O)	(dB(A))	(g)	
HA50151V4-1000U-A99	●	12	25	0.30	3200	7.7	0.07	15.4	33.0	1

Air Flow-Static Pressure Characteristics

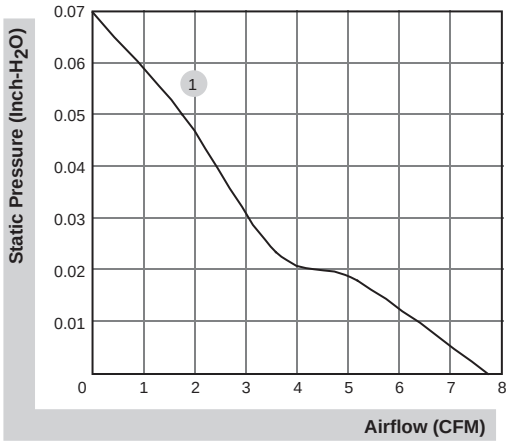

External dimensions(mm)

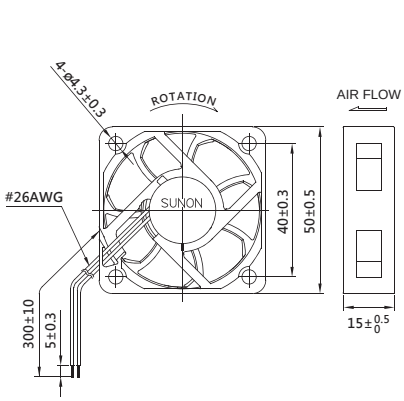

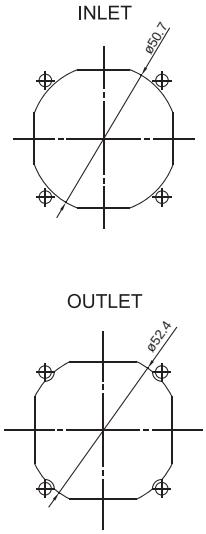

*All model could be customized. Please contact with Sunon Sales

Beijing Hengrui Mechanical and Electrical Equipment Co,Ltd
+86 10-62547612
zhangyu@bjhengrui.cn
en.bjhengrui.com

60x60x10 mm

12.2~16.3 CFM

Specifications

MAGLev by SUNON	Bearing	Rating Voltage	Power Current	Power Consumption	Speed	Air Flow	Static Pressure	Noise	Weight	Curve
	● VAPO	(VDC)	(mA)	(WATTS)	(RPM)	(CFM)	(inch-H_2O)	(dB(A))	(g)	
MF60101V1-1000U-A99	●	12	108	1.30	4000	16.3	0.12	28.5	23.0	1
MF60101V2-1000U-A99	●	12	75	0.90	3500	14.3	0.10	25.0	23.0	2
MF60101V3-1000U-A99	●	12	46	0.56	3000	12.2	0.08	20.5	23.0	3

Air Flow-Static Pressure Characteristics

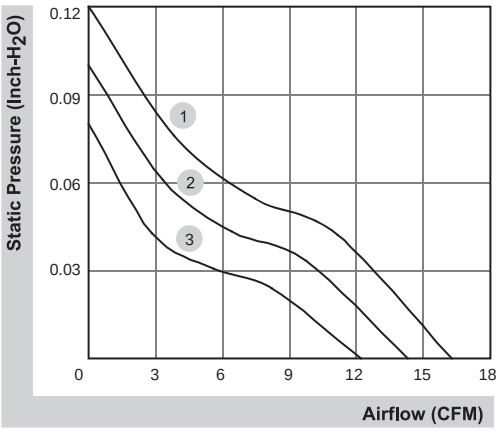

External dimensions(mm)

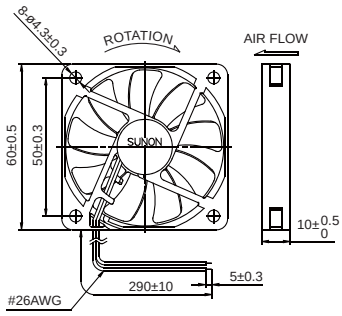

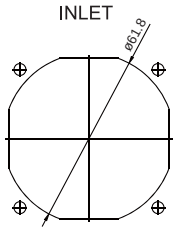

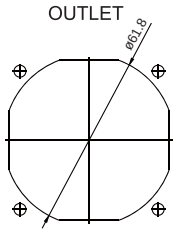

*All model could be customized. Please contact with Sunon Sales

Beijing Hengrui Mechanical and Electrical Equipment Co,Ltd
+86 10-62547612
zhangyu@bjhengrui.cn
en.bjhengrui.com