60x60x25 mm

16.0~27.0 CFM

Specification

MAGLev by SUNON	Bearing	Rated Valtage	Power Current	Power Consumption	Speed	Airflow	Static Pressure	Noise	Weight	Curve
	● VAPO	(VDC)	(mA)	(WATTS)	(RPM)	(CFM)	(inch-H_2O)	(dB(A))	(g)	
MF60251VX-1000U-A99	●	12	130	1.56	5200	27.0	0.31	31.2	45.0	1
MF60251V1-1000U-A99	●	12	75	0.90	4500	23.5	0.21	27.0	45.0	2
MF60251V2-1000U-A99	●	12	72	0.87	3800	19.3	0.15	22.0	45.0	3
MF60251V3-1000U-A99	●	12	44	0.53	3100	16.0	0.10	16.7	45.0	4
MF60252VX-1000U-A99	●	24	80	1.92	5200	27.0	0.31	31.2	45.0	1
MF60252V1-1000U-A99	●	24	50	1.20	4500	23.5	0.21	27.0	45.0	2
MF60252V2-1000U-A99	●	24	30	0.72	3800	19.3	0.15	22.0	45.0	3
MF60252V3-1000U-A99	●	24	22	0.53	3100	16.0	0.10	16.7	45.0	4
Model	2BALL ○ Sleeve	(VDC)	(mA)	(WATTS)	(RPM)	(CFM)	(inch-H_2O)	(dB(A))	(g)	
EE60251S1-1000U-999	○	12	122	1.47	4500	23.5	0.21	27.0	45.0	2
EE60251S2-1000U-999	○	12	85	1.02	3800	19.3	0.15	22.0	45.0	3
EE60251S3-1000U-999	○	12	60	0.72	3100	16.0	0.10	16.7	45.0	4
EF60252S1-1000U-A99	○	24	50	1.20	4500	23.5	0.21	27.0	45.0	2

Function

(MF Series) R Type : F99 ／ F Type : G99
(EE Series) F Type : C99
(EF Series) F Type : G99

Air Flow-Static Pressure Characteristics

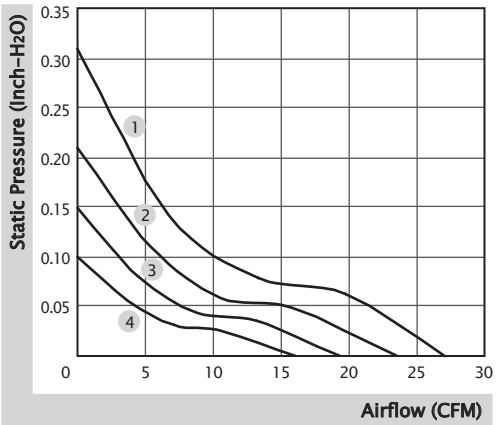

External Dimensions(mm)

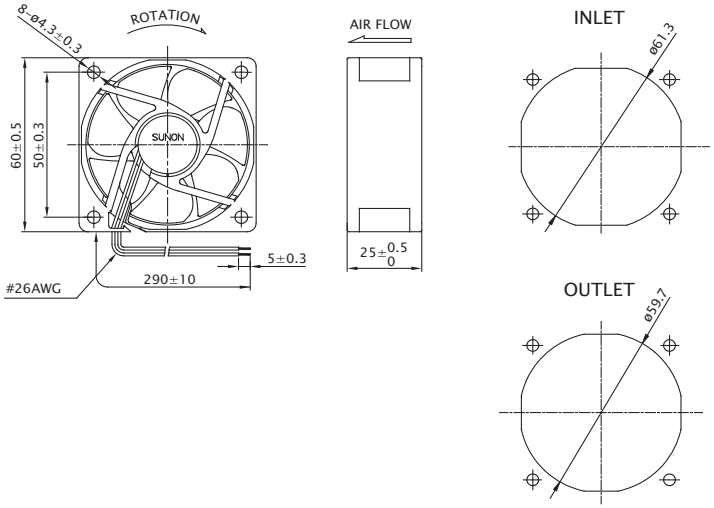

※ All model could be customized. Please contact with Sunon Sales.
※ Specifications are subject to change without notice. Please Visit SUNON website at www.sunon.com for update information.