40x40x56 mm

26.9~31.7 CFM

Specification

Model	Bearing	Rated Voltage	Power Current	Power Consumption	Speed	Airflow	Static Pressure	Noise	Weight	Curve
	◉ 2BALL ○ Sleeve	(VDC)	(mA)	(WATTS)	(RPM)	(CFM)	(inch-H_2O)	(dB(A))	(g)	
PF40561BX-10000-A9H	◉	12	1390	16.68	21500/18000	31.7	3.76	65.9	87.0	1
PF40561B1-10000-A9H	◉	12	890	10.68	18000/15000	26.9	2.64	62.3	87.0	2

Function

R Type : F9H ／ F Type : G9H ／ PWM : H9H, Q9H, S9H

External dimensions(mm)

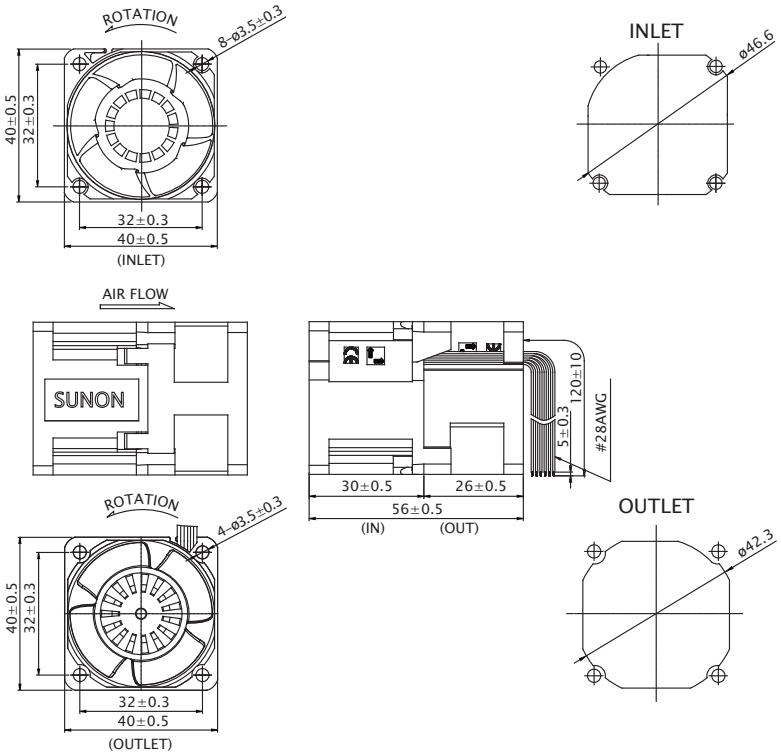

Air Flow-Static Pressure Characteristics

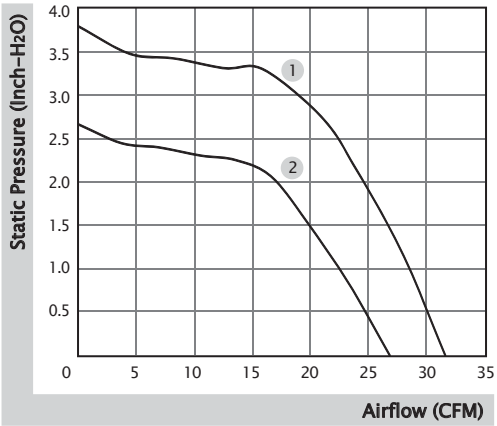

Beijing Hengrui Mechanical and Electrical Equipment Co,Ltd
+86 10-62547612
zhangyu@bjhengrui.cn
en.bjhengrui.com

40x40x56 mm

19.7~25.0 CFM

Specification

Model	Bearing	Rated Voltage	Power Current	Power Consumption	Speed	Airflow	Static Pressure	Noise	Weight	Curve
	◐ 2BALL ○ Sleeve	(VDC)	(mA)	(WATTS)	(RPM)	(CFM)	(inch-H_2O)	(dB(A))	(g)	
VG40561BX-0000-A9H	◐	12	1400	16.80	25500/22300	25.0	6.19	65.0	87.0	1
VG40561B1-0000-A9H	◐	12	750	9.00	20400/17800	19.7	4.16	62.5	87.0	2

Function F Type : G9H ／ PWM : S9H

Air Flow-Static Pressure Characteristics

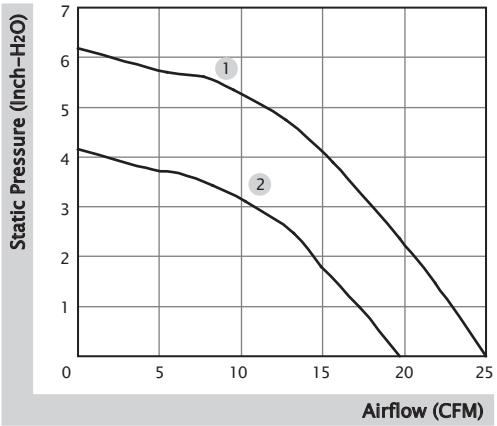

External Dimensions(mm)

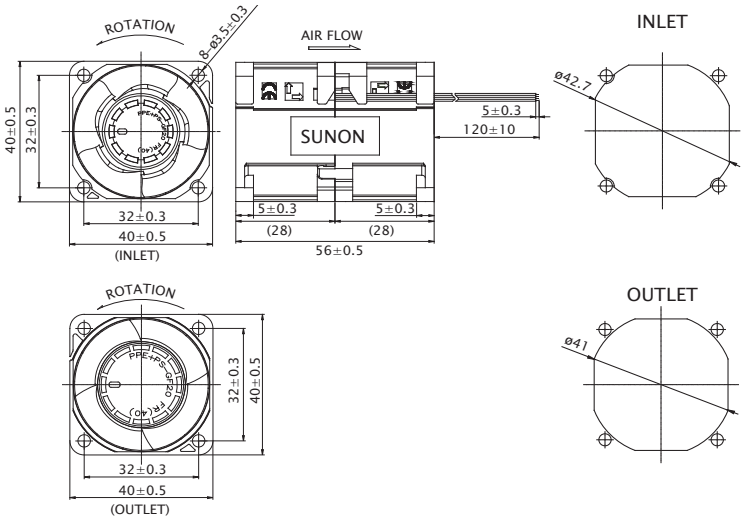

Beijing Hengrui Mechanical and Electrical Equipment Co,Ltd
+86 10-62547612
zhangyu@bjhengrui.cn
en.bjhengrui.com

45x45x10 mm

9.4~12.4 CFM

Specification

MAGLev by SUNON	Bearing	Rated Voltage	Power Current	Power Consumption	Speed	Airflow	Static Pressure	Noise	Weight	Curve
	● VAPO	(VDC)	(mA)	(WATTS)	(RPM)	(CFM)	(inch-H_2O)	(dB(A))	(g)	
MF45100V1-10000-A99	●	5	205	1.03	6500	12.4	0.18	32.5	16.0	1
MF45100V2-10000-A99	●	5	102	0.51	5000	9.4	0.12	26.1	16.0	3
MF45101V1-10000-A99	●	12	100	1.20	6500	12.4	0.18	32.5	16.0	1
* MF45101V2-10000-A99	●	12	47	0.57	5000	9.4	0.12	26.1	16.0	3
Model	2BALL ○ Sleeve	(VDC)	(mA)	(WATTS)	(RPM)	(CFM)	(inch-H_2O)	(dB(A))	(g)	
EF45101S1-10000-999	○	12	85	1.02	5700	10.8	0.16	29.8	16.0	2
EF45101S2-10000-999	○	12	60	0.72	5000	9.4	0.12	26.1	16.0	3

Function

(MF Series) R Type : F99 ／ F Type : G99 ／ PWM : H99, Q99, S99
(EF Series) F Type : C99

*MF45101V2-10000-A99 only available : R Type : F99 ／ F Type : G99

Air Flow-Static Pressure Characteristics

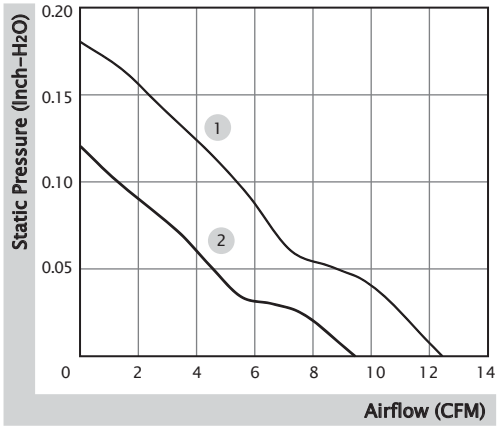

External Dimensions(mm)

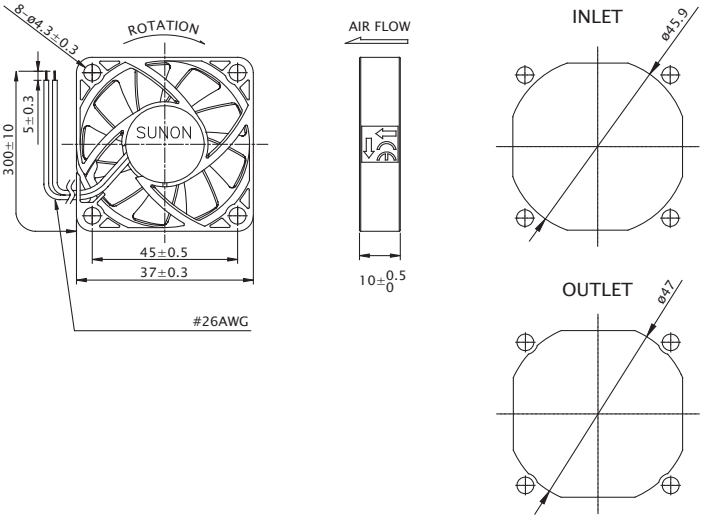

Beijing Hengrui Mechanical and Electrical Equipment Co,Ltd
+86 10-62547612
zhangyu@bjhengrui.cn
en.bjhengrui.com