92x92x25 mm

65.0~75.0 CFM

Specification

Model	Bearing	Rated Voltage	Power Current	Power Consumption	Speed	Airflow	Static Pressure	Noise	Weight	Curve
	◉ 2BALL ○ Sleeve	(VDC)	(mA)	(WATTS)	(RPM)	(CFM)	(inch-H_2O)	(dB(A))	(g)	
PF92251B1-10000-A99	◉	12	360	4.32	4500	75.0	0.35	46.1	103.0	1
PF92251B2-10000-A99	◉	12	275	3.30	4200	70.0	0.30	44.0	103.0	2
PF92251B3-10000-A99	◉	12	225	2.70	3900	65.0	0.25	41.8	103.0	3
PF92252B1-10000-A99	◉	24	205	4.92	4500	75.0	0.35	46.1	103.0	1

Function

R Type : F99 ／ F Type : G99 ／ PWM : H99, Q99, S99

Air Flow-Static Pressure Characteristics

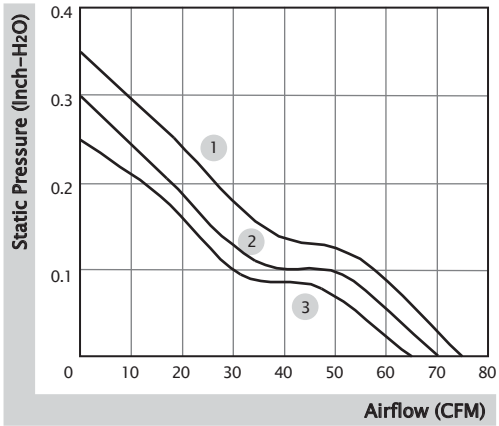

External Dimensions(mm)

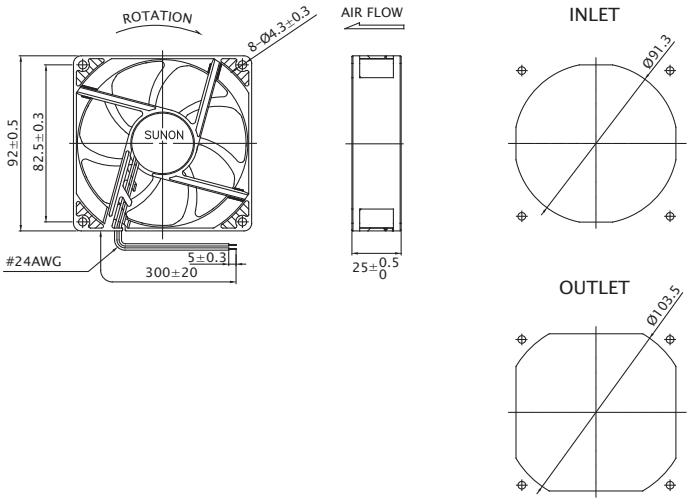

Beijing Hengrui Mechanical and Electrical Equipment Co,Ltd
+86 10-62547612
zhangyu@bjhengrui.cn
en.bjhengrui.com

92x92x25 mm

39.5~51.5 CFM

Specification

MAGLev by SUNON	Bearing	Rated Voltage	Power Current	Power Consumption	Speed	Airflow	Static Pressure	Noise	Weight	Curve
	● VAPO	(VDC)	(mA)	(WATTS)	(RPM)	(CFM)	(inch-H_2O)	(dB(A))	(g)	
MF92251V1-10000-A99	●	12	140	1.68	3000	51.5	0.15	34.0	92.0	1
MF92251V2-10000-A99	●	12	105	1.26	2700	45.0	0.13	32.0	92.0	2
MF92251V3-10000-A99	●	12	75	0.90	2400	39.5	0.10	28.0	92.0	3
MF92252V1-10000-A99	●	24	75	1.80	3000	51.5	0.15	34.0	92.0	1
MF92252V2-10000-A99	●	24	55	1.32	2700	45.0	0.13	32.0	92.0	2
MF92252V3-10000-A99	●	24	42	1.01	2400	39.5	0.10	28.0	92.0	3
Model	2BALL ○ Sleeve	(VDC)	(mA)	(WATTS)	(RPM)	(CFM)	(inch-H_2O)	(dB(A))	(g)	
EF92251S1-10000-A99	○	12	140	1.68	3000	51.5	0.15	34.0	92.0	1
EF92251S2-10000-A99	○	12	110	1.32	2700	45.0	0.13	32.0	92.0	2
EF92251S3-10000-A99	○	12	80	0.96	2400	39.5	0.10	28.0	92.0	3
EF92252S1-10000-A99	○	24	60	1.44	3000	51.5	0.15	34.0	92.0	1

Function

(MF Series) R Type : F99 ／ F Type : G99
(EF Series, Speed 1) R Type : F99 ／ F Type : G99
(EF Series, Speed 2,3) F Type : G99

Air Flow-Static Pressure Characteristics

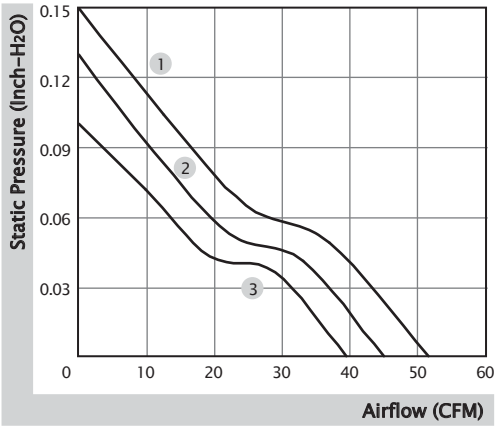

External Dimensions(mm)

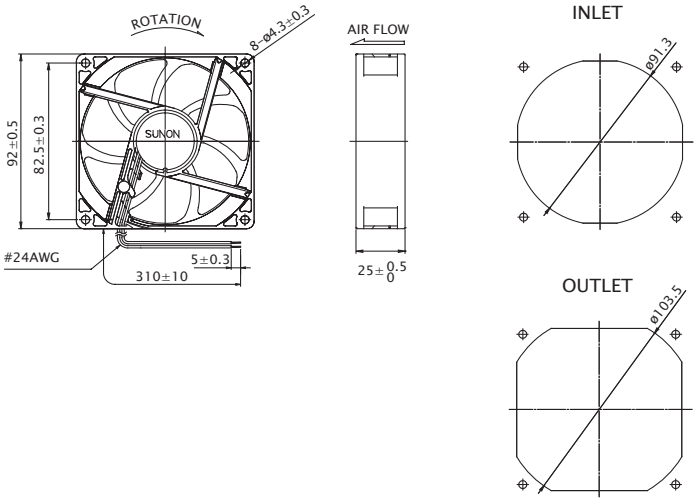

Beijing Hengrui Mechanical and Electrical Equipment Co,Ltd
+86 10-62547612
zhangyu@bjhengrui.cn
en.bjhengrui.com

92x92x25 mm

39.5~51.5 CFM

Specification

MAGLev by SUNON	Bearing	Rated Voltage	Power Current	Power Consumption	Speed	Airflow	Static Pressure	Noise	Weight	Curve
	● VAPO	(VDC)	(mA)	(WATTS)	(RPM)	(CFM)	(inch-H_2O)	(dB(A))	(g)	
EF92251B1-10000-A99	✪	12	125	1.50	3000	51.5	0.17	34.0	92.0	1
EF92251B2-10000-A99	✪	12	90	1.08	2700	45.0	0.15	32.0	92.0	2
EF92251B3-10000-A99	✪	12	62	0.75	2400	39.5	0.12	28.0	92.0	3
EF92252B1-10000-A99	✪	24	63	1.52	3000	51.5	0.17	34.0	92.0	1
EF92252B2-10000-A99	✪	24	45	1.08	2700	45.0	0.15	32.0	92.0	2

Function R Type : F99 ／ F Type : G99

Air Flow-Static Pressure Characteristics

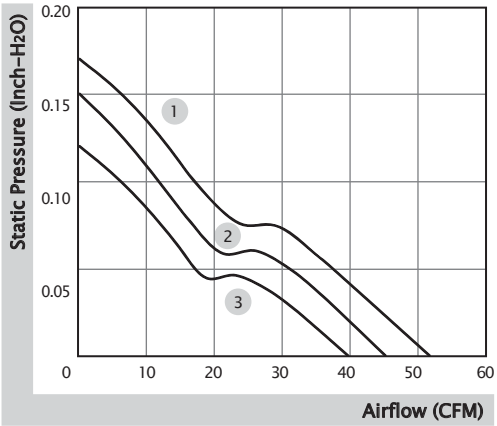

External Dimensions(mm)

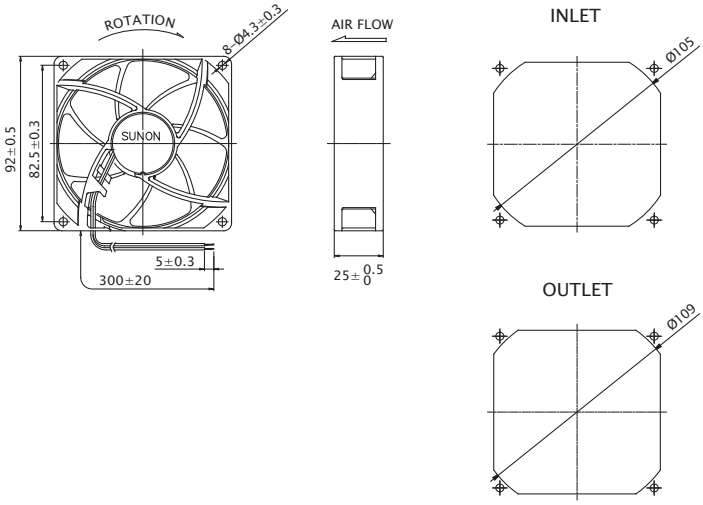

Beijing Hengrui Mechanical and Electrical Equipment Co,Ltd
+86 10-62547612
zhangyu@bjhengrui.cn
en.bjhengrui.com