92x92x38 mm

91.7~120.2 CFM

Specification

Model	Bearing	Rated Voltage	Power Current	Power Consumption	Speed	Airflow	Static Pressure	Noise	Weight	Curve
	◉ 2BALL ○ Sleeve	(VDC)	(mA)	(WATTS)	(RPM)	(CFM)	(inch-H_2O)	(dB(A))	(g)	
PF92381B2-10000-A9H	◉	12	935	11.22	5800	120.2	0.72	54.7	202.0	1
PF92381B3-10000-A9H	◉	12	485	5.82	4700	91.7	0.51	49.5	202.0	2
PF92382B2-10000-A9H	◉	24	480	11.52	5800	120.2	0.72	54.7	190.0	1
PF92382B3-10000-A9H	◉	24	250	6.00	4700	91.7	0.51	49.5	190.0	2

Function

R Type : F9H ／ F Type : G9H ／ PWM : H9H, Q9H, S9H

Air Flow-Static Pressure Characteristics

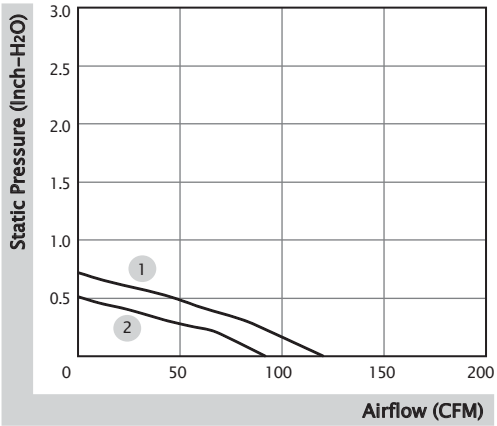

External Dimensions(mm)

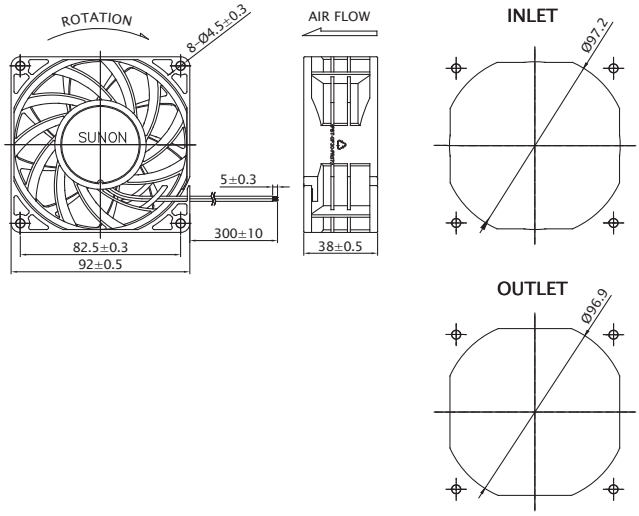

Beijing Hengrui Mechanical and Electrical Equipment Co,Ltd
+86 10-62547612
zhangyu@bjhengrui.cn
en.bjhengrui.com

92x92x38 mm

91.7~120.2 CFM

Specification

Model	Bearing	Rated Voltage	Power Current	Power Consumption	Speed	Airflow	Static Pressure	Noise	Weight	Curve
	◉ 2BALL ○ Sleeve	(VDC)	(mA)	(WATTS)	(RPM)	(CFM)	(inch-H_2O)	(dB(A))	(g)	
PMD1209PMB1-A (2).GN	◉	12	1040	12.5	4900	120.2	0.71	57.6	190.0	1
PMD1209PMB2-A (2).GN	◉	12	710	8.5	4400	106.3	0.56	53.8	190.0	2
PMD1209PMB3-A (2).GN	◉	12	470	5.6	3800	91.7	0.43	50.3	190.0	3
PMD2409PMB1-A (2).GN	◉	24	510	12.2	4900	120.2	0.71	57.6	190.0	1
PMD2409PMB2-A (2).GN	◉	24	400	9.6	4400	106.3	0.56	53.8	190.0	2
PMD2409PMB3-A (2).GN	◉	24	250	6.0	3800	91.7	0.43	50.3	190.0	3

Function

R Type : (2).R.GN ／ F Type : (2).F.GN

Air Flow-Static Pressure Characteristics

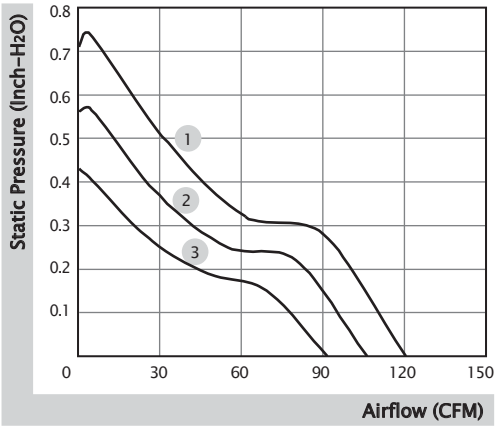

External Dimensions(mm)

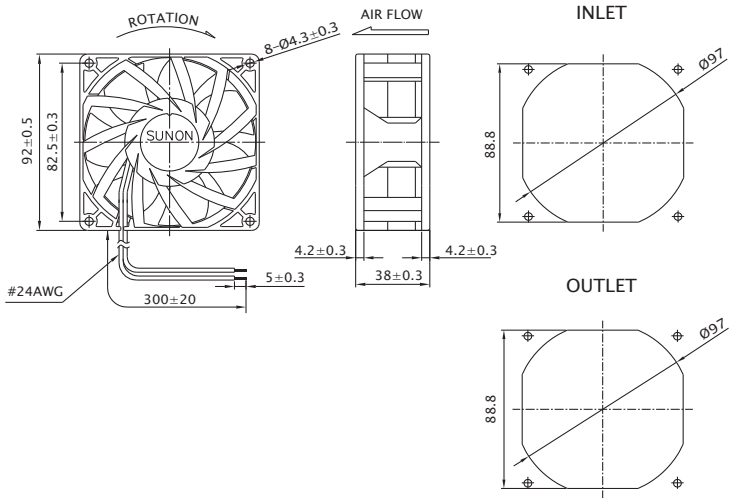

Beijing Hengrui Mechanical and Electrical Equipment Co,Ltd
+86 10-62547612
zhangyu@bjhengrui.cn
en.bjhengrui.com

120x120x25 mm

120.0~150.0 CFM

Specification

Model	Bearing	Rated Voltage	Power Current	Power Consumption	Speed	Airflow	Static Pressure	Noise	Weight	Curve
	◐ 2BALL ○ Sleeve	(VDC)	(mA)	(WATTS)	(RPM)	(CFM)	(inch-H_2O)	(dB(A))	(g)	
PMD1212PTB1-A (2).GN	◐	12	1000	12.0	4500	150.0	0.62	54.0	220.0	1
PMD1212PTB2-A (2).GN	◐	12	720	8.6	4000	133.0	0.50	51.0	220.0	2
PMD1212PTB3-A (2).GN	◐	12	540	6.5	3600	120.0	0.41	48.0	220.0	3
PMD2412PTB1-A (2).GN	◐	24	490	11.8	4500	150.0	0.62	54.0	220.0	1
PMD2412PTB3-A (2).GN	◐	24	280	6.7	3600	120.0	0.41	48.0	220.0	3

Function

R Type : (2).R.GN ／ F Type : (2).F.GN

Air Flow-Static Pressure Characteristics

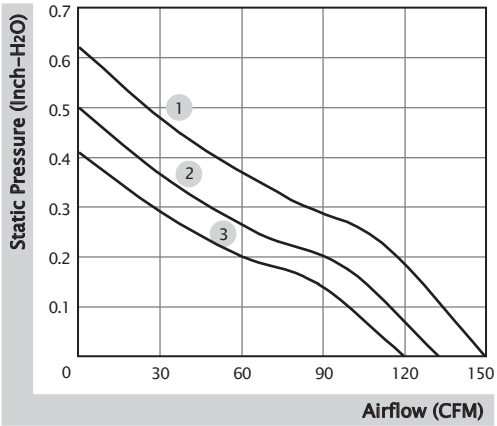

External Dimensions(mm)

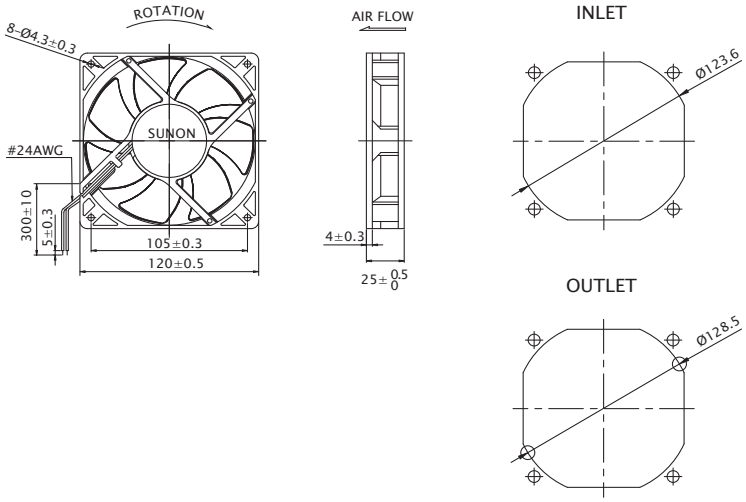

Beijing Hengrui Mechanical and Electrical Equipment Co,Ltd
+86 10-62547612
zhangyu@bjhengrui.cn
en.bjhengrui.com