80x80x32 mm (IP56/IP68)

50.3~59.4 CFM

Specification

Model	Bearing	Rated Voltage	Power Current	Power Consumption	Speed	Airflow	Static Pressure	Noise	Weight	Curve
	◉ 2BALL ○ Sleeve	(VDC)	(mA)	(WATTS)	(RPM)	(CFM)	(inch-H_2O)	(dB(A))	(g)	
GF80321B1-0000-AC9	◉	12	310	3.72	4800	59.4	0.36	45.2	109.0	1
GF80321B2-0000-AC9	◉	12	230	2.76	4500	55.9	0.32	43.1	109.0	2
GF80321B3-0000-AC9	◉	12	190	2.28	4100	50.3	0.27	41.1	109.0	3
GF80321B1-0000-AE9	◉	12	310	3.72	4800	59.4	0.36	45.2	109.0	1
GF80321B2-0000-AE9	◉	12	230	2.76	4500	55.9	0.32	43.1	109.0	2
GF80321B3-0000-AE9	◉	12	190	2.28	4100	50.3	0.27	41.1	109.0	3

Function

(IP56) R Type : FC9 ／ F Type : GC9 ／ PWM : HC9, QC9, SC9
(IP68) R Type : FE9 ／ F Type : GE9 ／ PWM : HE9, QE9, SE9

Air Flow-Static Pressure Characteristics

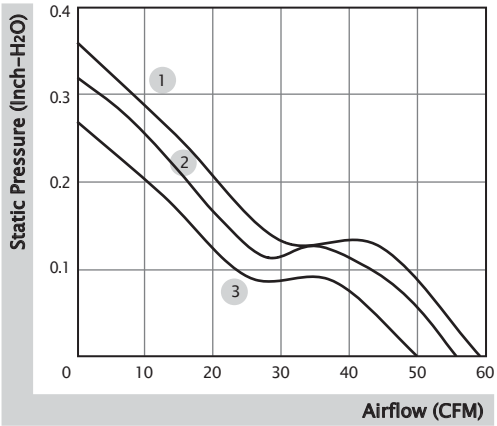

External Dimensions(mm)

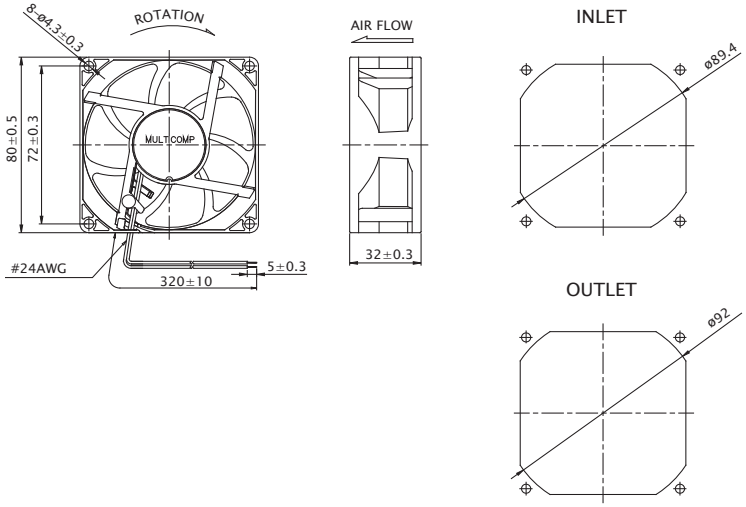

Beijing Hengrui Mechanical and Electrical Equipment Co,Ltd
+86 10-62547612
zhangyu@bjhengrui.cn
en.bjhengrui.com

80x80x38 mm (IP68/GR487)

104.5~132.9 CFM

Specification

Model	Bearing	Rated Voltage	Power Current	Power Consumption	Speed	Airflow	Static Pressure	Noise	Weight	Curve
	◉ 2BALL ○ Sleeve	(VDC)	(mA)	(WATTS)	(RPM)	(CFM)	(inch-H_2O)	(dB(A))	(g)	
GF80382BX-10000-AEP	◉	24	1630	39.12	10000	132.9	1.80	65.2	235.0	1
GF80382B1-10000-AEP	◉	24	860	20.64	8000	104.5	1.13	59.7	235.0	2
GF80382BX-10000-ADP	◉	24	1630	39.12	10000	132.9	1.80	65.2	235.0	1
GF80382B1-10000-ADP	◉	24	860	20.64	8000	104.5	1.13	59.7	235.0	2

Function

(IP68) R Type : FEP ／ F Type : GEP ／ PWM : HEP, QEP, SEP
(GR487) R Type : FDP ／ F Type : GDP ／ PWM : HDP, QDP, SDP

Air Flow-Static Pressure Characteristics

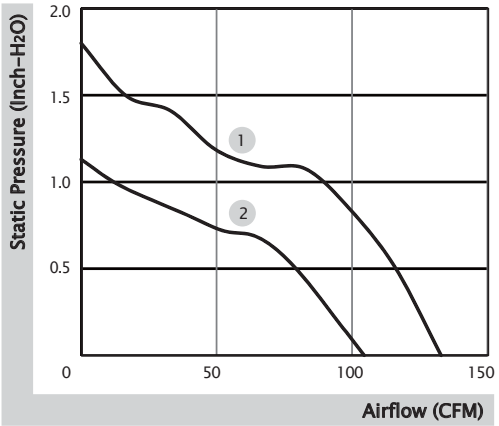

External Dimensions(mm)

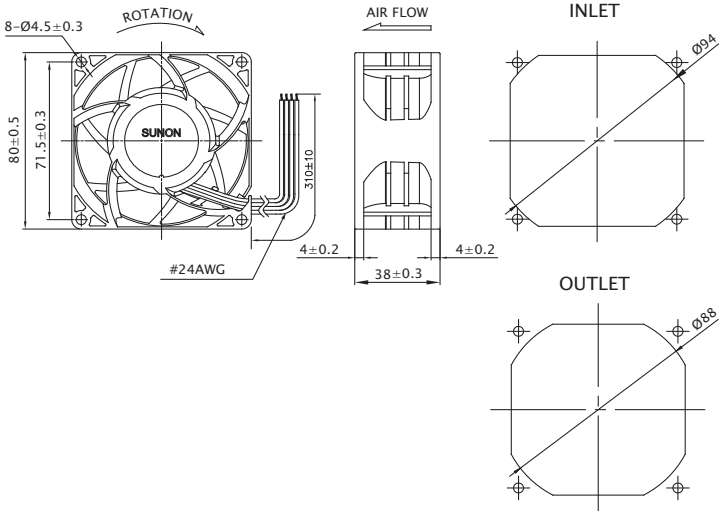

Beijing Hengrui Mechanical and Electrical Equipment Co,Ltd
+86 10-62547612
zhangyu@bjhengrui.cn
en.bjhengrui.com

80x80x38 mm

113.9~141.9 CFM

Specification

Model	Bearing	Rated Voltage	Power Current	Power Consumption	Speed	Airflow	Static Pressure	Noise	Weight	Curve
	◐ 2BALL ○ Sleeve	(VDC)	(mA)	(WATTS)	(RPM)	(CFM)	(inch-H_2O)	(dB(A))	(g)	
PF80381BX-10000-A9H	◐	12	4000	48.00	14000	141.9	3.50	69.1	195.0	1
PF80381B1-10000-A9H	◐	12	1800	21.60	11200	113.9	2.68	63.4	195.0	2

Function

R Type : F9H ／ F Type : G9H ／ PWM : H9H, Q9H, S9H

Air Flow-Static Pressure Characteristics

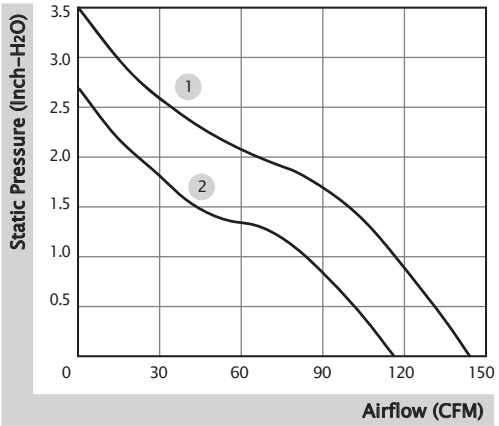

External Dimensions(mm)

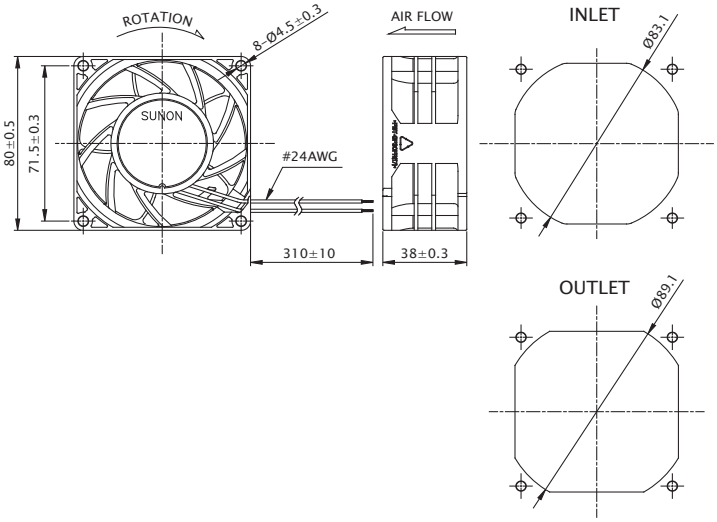

Beijing Hengrui Mechanical and Electrical Equipment Co,Ltd
+86 10-62547612
zhangyu@bjhengrui.cn
en.bjhengrui.com