92x92x38 mm (IP68/GR487)

145.3~172.9 CFM

Specification

Model	Bearing	Rated Voltage	Power Current	Power Consumption	Speed	Airflow	Static Pressure	Noise	Weight	Curve
	◉ 2BALL ○ Sleeve	(VDC)	(mA)	(WATTS)	(RPM)	(CFM)	(inch-H_2O)	(dB(A))	(g)	
GF92382BX-10000-AEP	◉	24	1700	40.80	9000	172.9	1.73	66.8	260.0	1
GF92382B1-10000-AEP	◉	24	850	20.40	7200	145.3	1.20	60.6	260.0	2
GF92382BX-10000-ADP	◉	24	1700	40.80	9000	172.9	1.73	66.8	260.0	1
GF92382B1-10000-ADP	◉	24	850	20.40	7200	145.3	1.20	60.6	260.0	2

Function

(IP68) R Type : FEP ／ F Type : GEP ／ PWM : HEP, QEP, SEP
(GR487) R Type : FDP ／ F Type : GDP ／ PWM : HDP, QDP, SDP

Air Flow-Static Pressure Characteristics

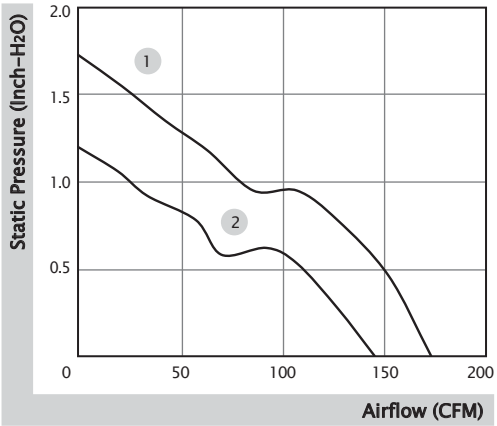

External Dimensions(mm)

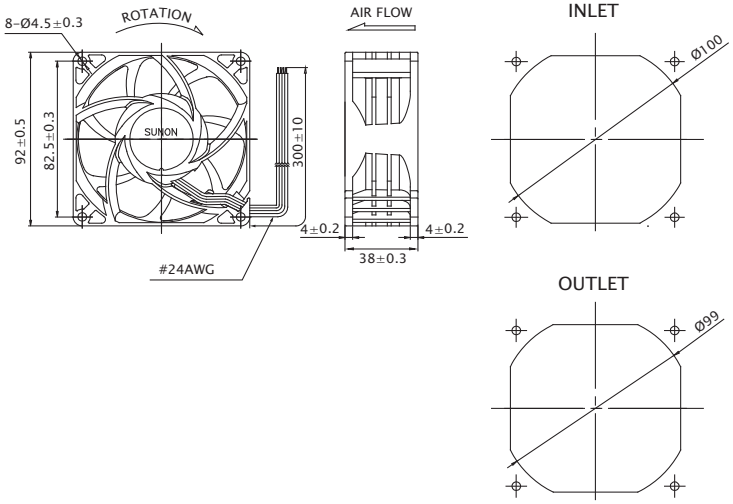

Beijing Hengrui Mechanical and Electrical Equipment Co,Ltd
+86 10-62547612
zhangyu@bjhengrui.cn
en.bjhengrui.com

92x92x38 mm

138.1~182.4 CFM

Specification

Model	Bearing	Rated Voltage	Power Current	Power Consumption	Speed	Airflow	Static Pressure	Noise	Weight	Curve
	◉ 2BALL ○ Sleeve	(VDC)	(mA)	(WATTS)	(RPM)	(CFM)	(inch-H_2O)	(dB(A))	(g)	
PF92381BX-10000-A9H	◉	12	4200	50.40	12000	182.4	2.94	70.2	227.0	1
PF92381B1-10000-A9H	◉	12	1850	22.20	9300	138.1	1.95	62.9	227.0	2

Function

R Type : F9H ／ F Type : G9H ／ PWM : H9H, Q9H, S9H

Air Flow-Static Pressure Characteristics

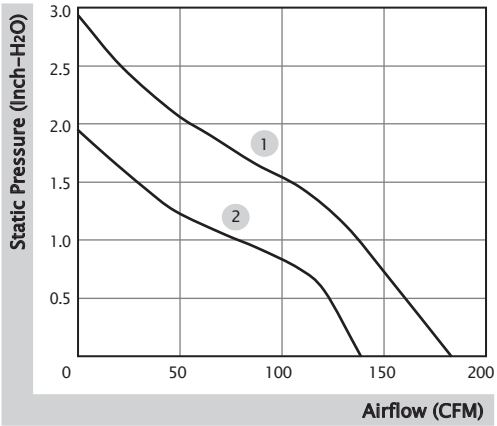

External Dimensions(mm)

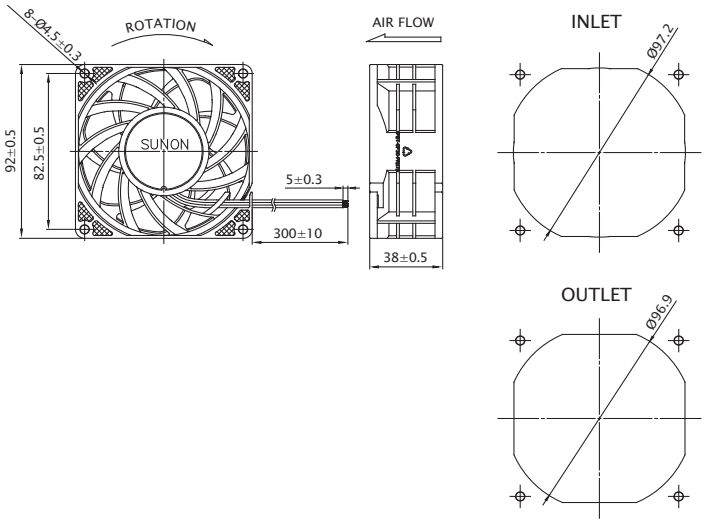

Beijing Hengrui Mechanical and Electrical Equipment Co,Ltd
+86 10-62547612
zhangyu@bjhengrui.cn
en.bjhengrui.com

92x92x38 mm

91.7~120.2 CFM

Specification

Model	Bearing	Rated Voltage	Power Current	Power Consumption	Speed	Airflow	Static Pressure	Noise	Weight	Curve
	◉ 2BALL ○ Sleeve	(VDC)	(mA)	(WATTS)	(RPM)	(CFM)	(inch-H_2O)	(dB(A))	(g)	
PF92381B2-10000-A9H	◉	12	935	11.22	5800	120.2	0.72	54.7	202.0	1
PF92381B3-10000-A9H	◉	12	485	5.82	4700	91.7	0.51	49.5	202.0	2
PF92382B2-10000-A9H	◉	24	480	11.52	5800	120.2	0.72	54.7	190.0	1
PF92382B3-10000-A9H	◉	24	250	6.00	4700	91.7	0.51	49.5	190.0	2

Function

R Type : F9H ／ F Type : G9H ／ PWM : H9H, Q9H, S9H

Air Flow-Static Pressure Characteristics

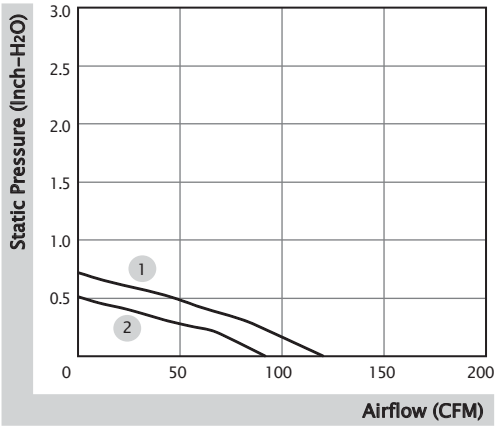

External Dimensions(mm)

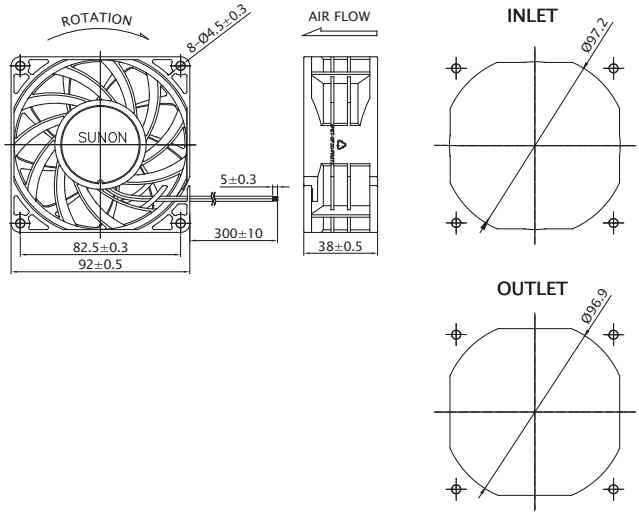

Beijing Hengrui Mechanical and Electrical Equipment Co,Ltd
+86 10-62547612
zhangyu@bjhengrui.cn
en.bjhengrui.com