17x17x8 mm

0.7~0.9 CFM

Specifications

MAGLev by SUNON	Bearing	Rating Voltage	Power Current	Power Consumption	Speed	Air Flow	Static Pressure	Noise	Weight	Curve
	● VAPO	(VDC)	(mA)	(WATTS)	(RPM)	(CFM)	(inch-H_2O)	(dB(A))	(g)	
MF17080V1-1000U-A99	●	5	93	0.47	21000	0.9	0.28	21.5	3.9	1
MF17080V2-1000U-A99	●	5	66	0.33	16500	0.7	0.17	14.2	3.9	2

Air Flow-Static Pressure Characteristics

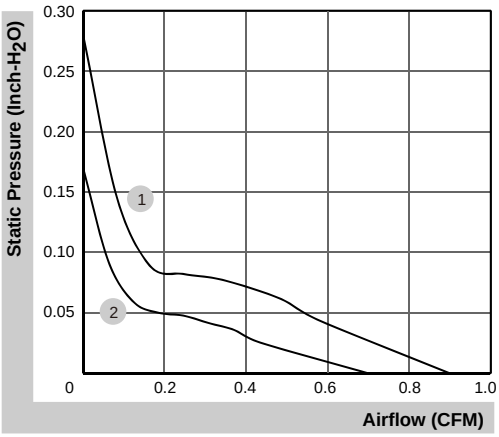

External dimensions(mm)

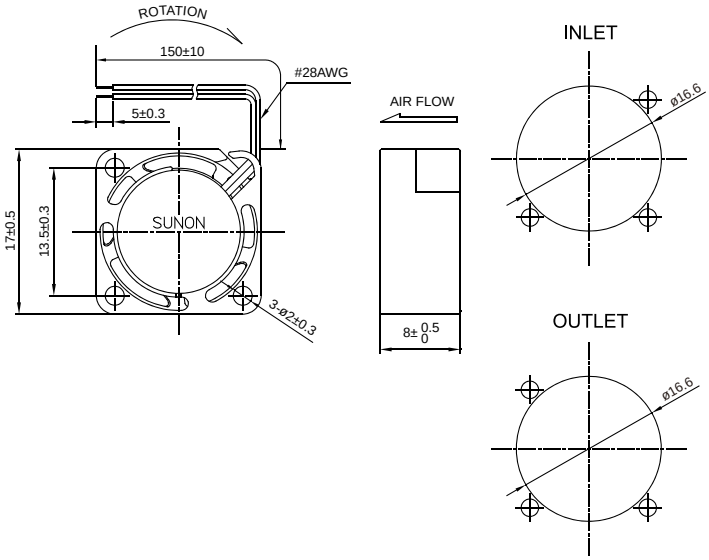

*All model could be customized. Please contact with Sunon Sales

Beijing Hengrui Mechanical and Electrical Equipment Co,Ltd
+86 10-62547612
zhangyu@bjhengrui.cn
en.bjhengrui.com

20x20x8 mm

1.3~1.6 CFM

Specifications

MAGLev by SUNON	Bearing	Rating Voltage	Power Current	Power Consumption	Speed	Air Flow	Static Pressure	Noise	Weight	Curve
	● VAPO	(VDC)	(mA)	(WATTS)	(RPM)	(CFM)	(inch-H_2O)	(dB(A))	(g)	
MF20080V1-1000U-A99	●	5	90	0.45	15000	1.6	0.24	23.0	4.0	1
MF20080V2-1000U-A99	●	5	68	0.34	12000	1.3	0.15	21.0	4.0	2

Air Flow-Static Pressure Characteristics

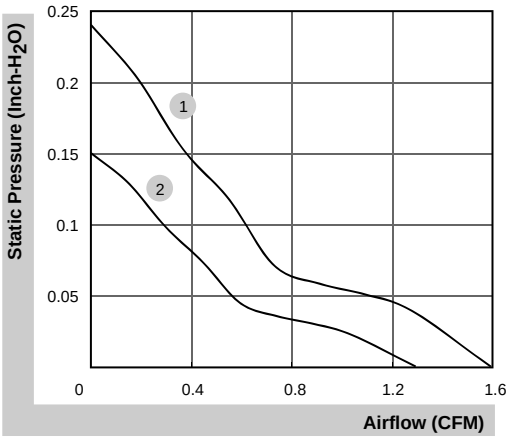

External dimensions(mm)

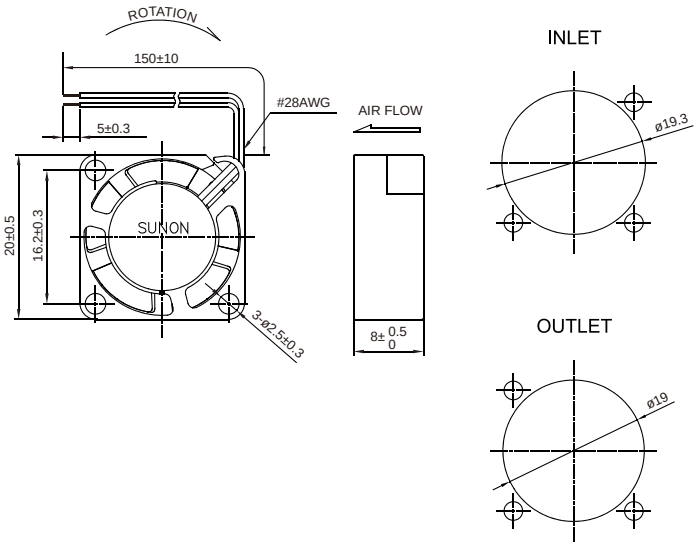

*All model could be customized. Please contact with Sunon Sales

Beijing Hengrui Mechanical and Electrical Equipment Co,Ltd
+86 10-62547612
zhangyu@bjhengrui.cn
en.bjhengrui.com

20x20x10 mm

1.5~1.9 CFM

Specifications

MAGLev by SUNON	Bearing	Rating Voltage	Power Current	Power Consumption	Speed	Air Flow	Static Pressure	Noise	Weight	Curve
	● VAPO	(VDC)	(mA)	(WATTS)	(RPM)	(CFM)	(inch-H_2O)	(dB(A))	(g)	
MF20100V1-1000U-A99	●	5	106	0.53	16500	1.9	0.29	25.0	4.65	1
MF20100V2-1000U-A99	●	5	80	0.40	14000	1.5	0.20	20.0	4.65	2

Air Flow-Static Pressure Characteristics

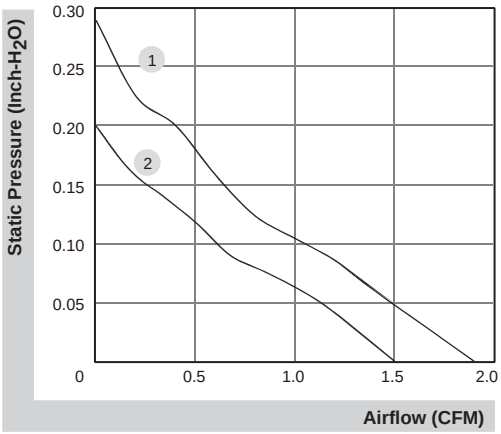

External dimensions(mm)

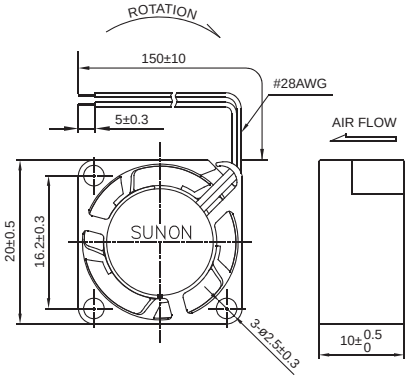

INLET

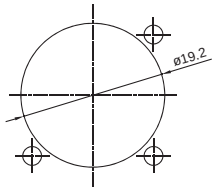

OUTLET

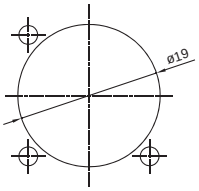

*All model could be customized. Please contact with Sunon Sales

Beijing Hengrui Mechanical and Electrical Equipment Co,Ltd
+86 10-62547612
zhangyu@bjhengrui.cn
en.bjhengrui.com