25x25x10 mm

1.2~3.8 CFM

Specifications

MAGLev by SUNON	Bearing	Rating Voltage	Power Current	Power Consumption	Speed	Air Flow	Static Pressure	Noise	Weight	Curve
	● VAPO	(VDC)	(mA)	(WATTS)	(RPM)	(CFM)	(inch-H_2O)	(dB(A))	(g)	
MF25100V1-1000U-A99	●	5	105	0.53	13000	3.5	0.25	23.0	6.9	2
MF25100V2-1000U-A99	●	5	65	0.33	9800	3.0	0.18	16.0	6.9	3
MF25100V3-1000U-A99	●	5	40	0.20	6800	1.3	0.07	8.8	6.9	4
MF25101V1-1000U-A99	●	12	50	0.60	14000	3.8	0.27	26.0	6.8	1
MF25101V2-1000U-A99	●	12	30	0.36	9600	3.0	0.18	16.0	6.8	3
MF25101V3-1000U-A99	●	12	17	0.21	6000	1.2	0.05	4.8	6.8	5

Air Flow-Static Pressure Characteristics

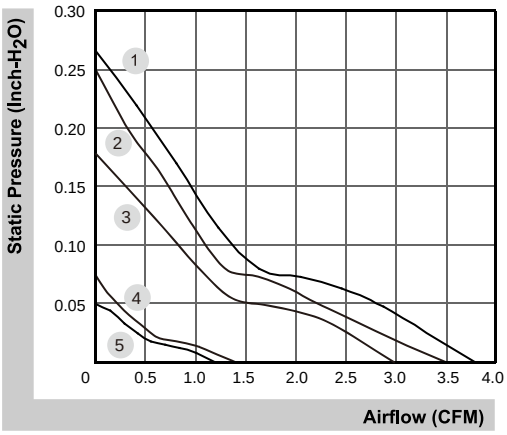

External dimensions(mm)

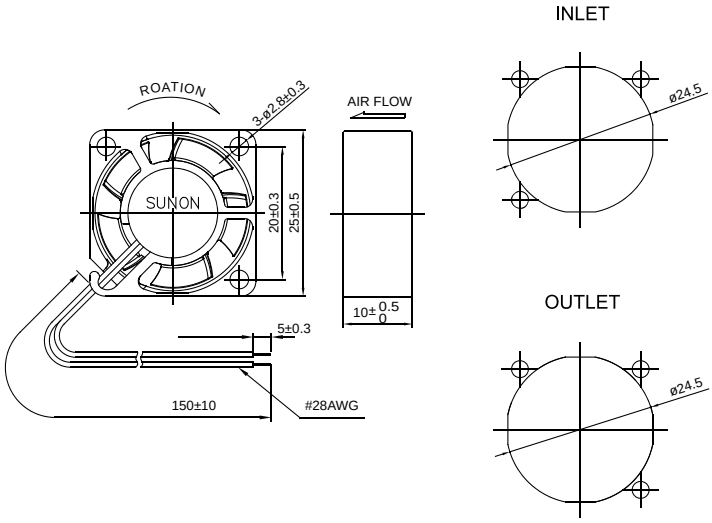

*All model could be customized. Please contact with Sunon Sales

Beijing Hengrui Mechanical and Electrical Equipment Co,Ltd
+86 10-62547612
zhangyu@bjhengrui.cn
en.bjhengrui.com

25x25x15 mm

1.3~3.1 CFM

Specifications

MAGLev by SUNON	Bearing	Rating Voltage	Power Current	Power Consumption	Speed	Air Flow	Static Pressure	Noise	Weight	Curve
	● VAPO	(VDC)	(mA)	(WATTS)	(RPM)	(CFM)	(inch-H_2O)	(dB(A))	(g)	
MF25150V1-1000U-A99	●	5	85	0.43	10000	3.1	0.16	20.0	9.4	1
MF25150V2-1000U-A99	●	5	46	0.23	6800	2.2	0.11	11.3	9.4	2
MF25150V3-1000U-A99	●	5	35	0.18	5300	1.3	0.04	4.5	9.4	3

Air Flow-Static Pressure Characteristics

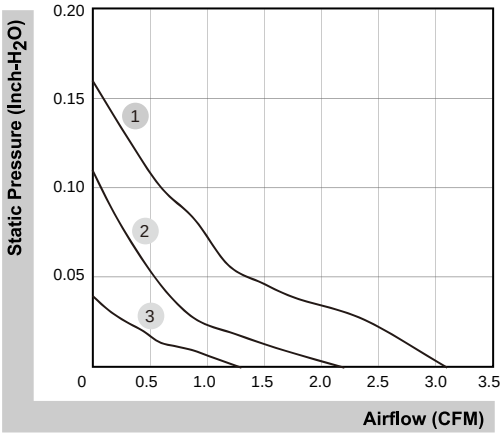

External dimensions(mm)

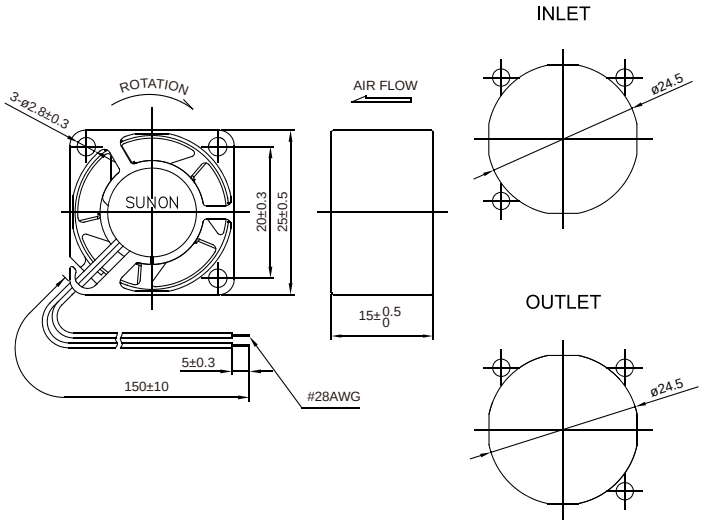

*All model could be customized. Please contact with Sunon Sales

Beijing Hengrui Mechanical and Electrical Equipment Co,Ltd
+86 10-62547612
zhangyu@bjhengrui.cn
en.bjhengrui.com

30x30x6 mm

3.7~4.9 CFM

Specifications

MAGLev by SUNON	Bearing	Rating Voltage	Power Current	Power Consumption	Speed	Air Flow	Static Pressure	Noise	Weight	Curve
	● VAPO	(VDC)	(mA)	(WATTS)	(RPM)	(CFM)	(inch-H_2O)	(dB(A))	(g)	
MF30060V1-1000U-A99	●	5	112	0.56	9100	4.9	0.17	23.6	6.0	1
MF30060V2-1000U-A99	●	5	72	0.36	7100	3.7	0.11	15.7	6.0	2

Air Flow-Static Pressure Characteristics

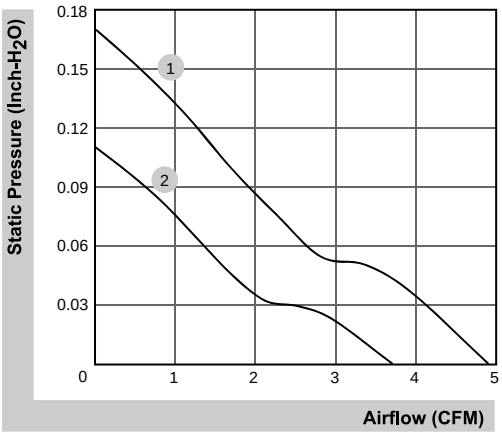

External dimensions(mm)

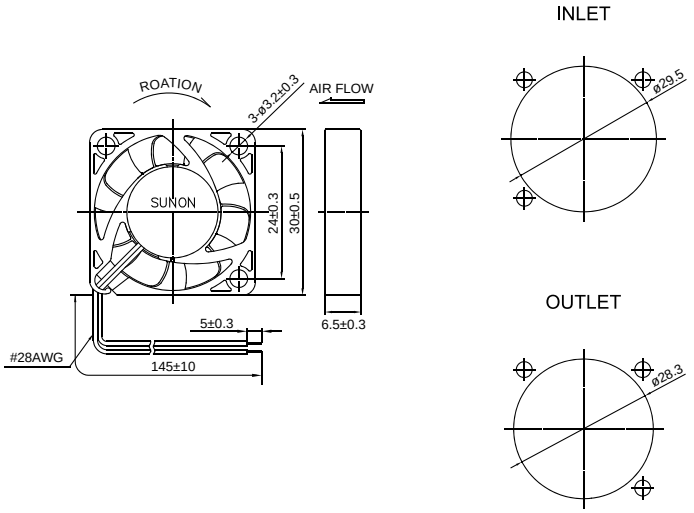

*All model could be customized. Please contact with Sunon Sales

Beijing Hengrui Mechanical and Electrical Equipment Co,Ltd
+86 10-62547612
zhangyu@bjhengrui.cn
en.bjhengrui.com