30x30x10 mm

4.6~5.5 CFM

Specifications

MAGLev by SUNON	Bearing	Rating Voltage	Power Current	Power Consumption	Speed	Air Flow	Static Pressure	Noise	Weight	Curve
	● VAPO	(VDC)	(mA)	(WATTS)	(RPM)	(CFM)	(inch-H_2O)	(dB(A))	(g)	
MF30101V1-1000U-A99	●	12	55	0.66	11500	5.5	0.25	23.0	7.8	1
MF30101V2-1000U-A99	●	12	32	0.39	8600	4.6	0.14	20.0	7.8	2

Air Flow-Static Pressure Characteristics

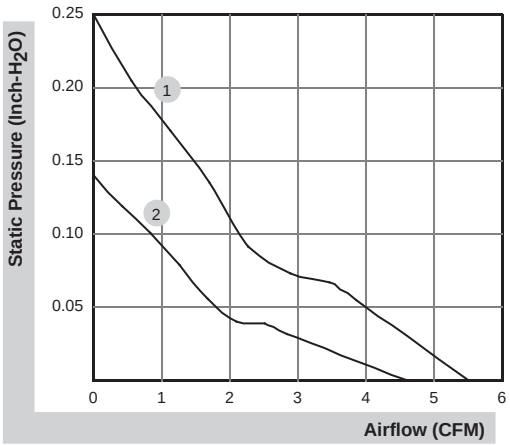

External dimensions(mm)

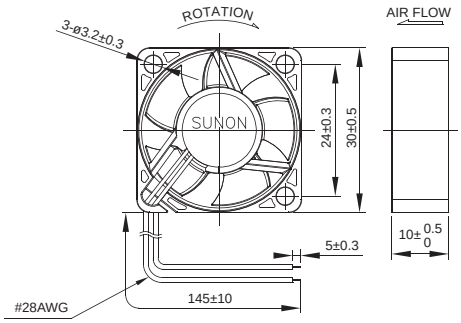

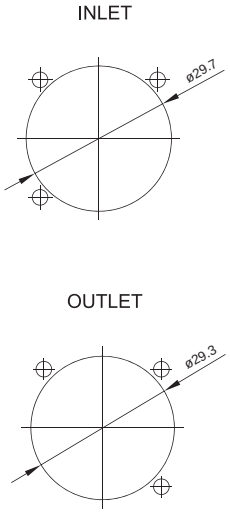

Beijing Hengrui Mechanical and Electrical Equipment Co,Ltd
+86 10-62547612
zhangyu@bjhengrui.cn
en.bjhengrui.com

30x30x10 mm

3.5 CFM

Specifications

MAGLev by SUNON	Bearing	Rating Voltage	Power Current	Power Consumption	Speed	Air Flow	Static Pressure	Noise	Weight	Curve
	● VAPO	(VDC)	(mA)	(WATTS)	(RPM)	(CFM)	(inch-H_2O)	(dB(A))	(g)	
HA30101V3-1000U-A99	●	12	25	0.30	7000	3.5	0.10	15.1	7.8	1

Air Flow-Static Pressure Characteristics

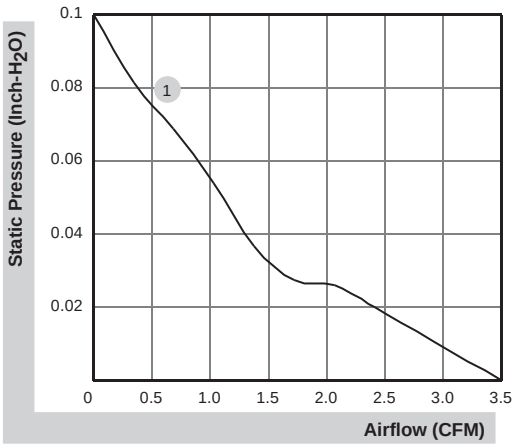

External dimensions(mm)

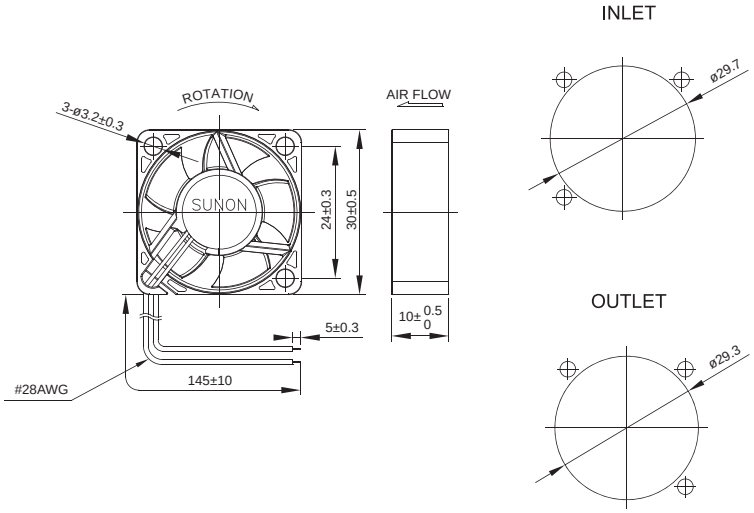

Beijing Hengrui Mechanical and Electrical Equipment Co,Ltd
+86 10-62547612
zhangyu@bjhengrui.cn
en.bjhengrui.com

30x30x15 mm

4.8~6.0 CFM

Specifications

MAGLev by SUNON	Bearing	Rating Voltage	Power Current	Power Consumption	Speed	Air Flow	Static Pressure	Noise	Weight	Curve
	● VAPO	(VDC)	(mA)	(WATTS)	(RPM)	(CFM)	(inch-H_2O)	(dB(A))	(g)	
MC30150V1-000U-A99	●	5	114	0.57	8500	6.0	0.17	27.0	13.5	1
MC30150V2-000U-A99	●	5	75	0.37	7000	4.8	0.12	20.0	13.5	2

Air Flow-Static Pressure Characteristics

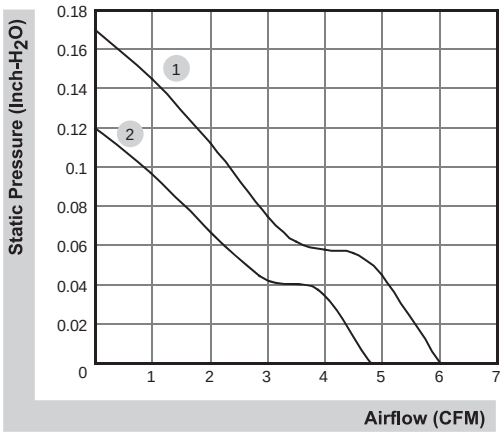

External dimensions(mm)

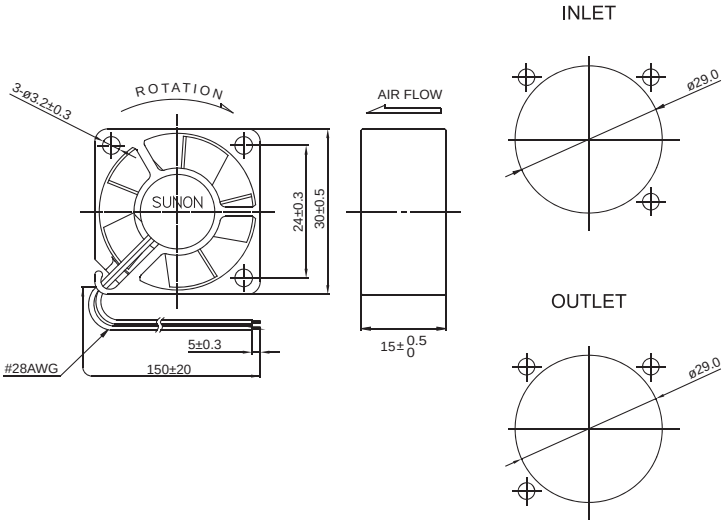

*All model could be customized. Please contact with Sunon Sales

Beijing Hengrui Mechanical and Electrical Equipment Co,Ltd
+86 10-62547612
zhangyu@bjhengrui.cn
en.bjhengrui.com