35x35x10 mm

3.6~7.2 CFM

Specifications

MAGLev by SUNON	Bearing	Rating Voltage	Power Current	Power Consumption	Speed	Air Flow	Static Pressure	Noise	Weight	Curve
	● VAPO	(VDC)	(mA)	(WATTS)	(RPM)	(CFM)	(inch-H_2O)	(dB(A))	(g)	
MF35100V1-1000U-A99	●	5	135	0.68	10000	7.2	0.22	28.0	10.5	1
MF35100V2-1000U-A99	●	5	80	0.40	7500	6.5	0.13	21.8	10.5	2
MF35100V3-1000U-A99	●	5	45	0.23	5300	3.7	0.07	13.1	10.5	3
MF35101V1-1000U-A99	●	12	60	0.72	10000	7.2	0.22	28.0	10.5	1
MF35101V2-1000U-A99	●	12	35	0.42	7500	6.5	0.13	21.8	10.5	2
MF35101V3-1000U-A99	●	12	20	0.24	5000	3.6	0.07	12.0	10.5	3

Air Flow-Static Pressure Characteristics

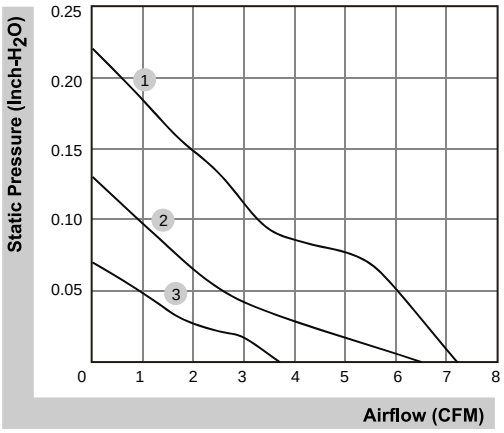

External dimensions(mm)

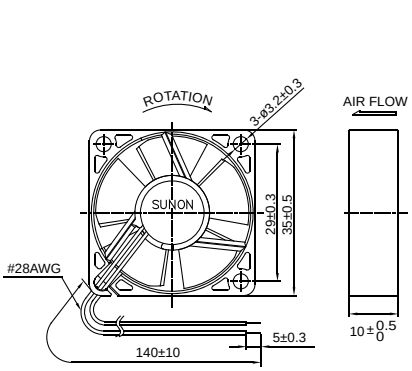

INLET

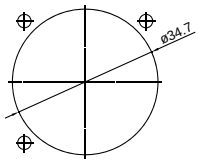

OUTLET

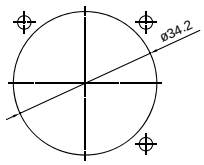

*All model could be customized. Please contact with Sunon Sales

Beijing Hengrui Mechanical and Electrical Equipment Co,Ltd
+86 10-62547612
zhangyu@bjhengrui.cn
en.bjhengrui.com

40x40x6 mm

5.5~6.3 CFM

Specifications

MAGLev by SUNON	Bearing	Rating Voltage	Power Current	Power Consumption	Speed	Air Flow	Static Pressure	Noise	Weight	Curve
	● VAPO	(VDC)	(mA)	(WATTS)	(RPM)	(CFM)	(inch-H_2O)	(dB(A))	(g)	
MF40060V1-1000U-A99	●	5	87	0.44	7000	6.3	0.10	29.3	6.8	1
MF40060V2-1000U-A99	●	5	65	0.33	6000	5.5	0.08	25.3	6.8	2

Air Flow-Static Pressure Characteristics

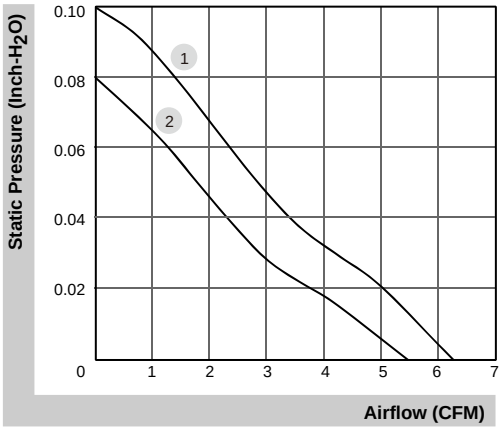

External dimensions(mm)

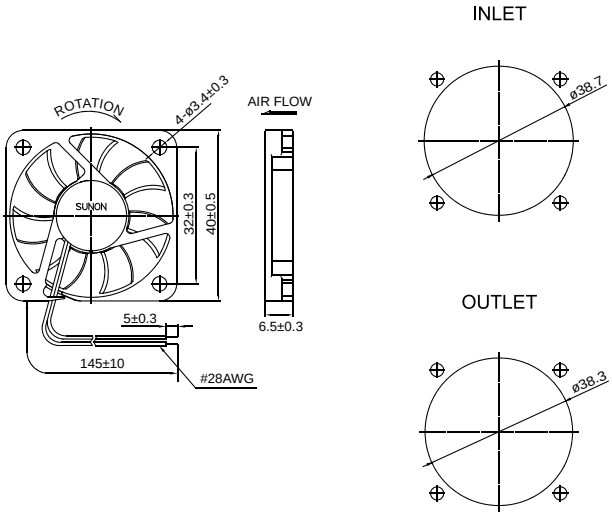

*All model could be customized. Please contact with Sunon Sales

Beijing Hengrui Mechanical and Electrical Equipment Co,Ltd
+86 10-62547612
zhangyu@bjhengrui.cn
en.bjhengrui.com

40x40x10 mm

7.0~9.9 CFM

Specifications

MAGLev by SUNON	Bearing	Rating Voltage	Power Current	Power Consumption	Speed	Air Flow	Static Pressure	Noise	Weight	Curve
	● VAPO	(VDC)	(mA)	(WATTS)	(RPM)	(CFM)	(inch-H_2O)	(dB(A))	(g)	
MF40100V1-1000U-A99	●	5	136	0.68	7000	8.0	0.19	27.3	15.6	2
MF40100V2-1000U-A99	●	5	94	0.47	5800	7.0	0.12	20.6	15.6	3
MF40101VX-1000U-A99	●	12	87	1.05	8500	9.9	0.25	31.4	15.6	1
MF40101V1-1000U-A99	●	12	51	0.62	7000	8.0	0.19	27.3	15.6	2
MF40101V2-1000U-A99	●	12	40	0.48	5800	7.0	0.12	20.6	15.6	3

Air Flow-Static Pressure Characteristics

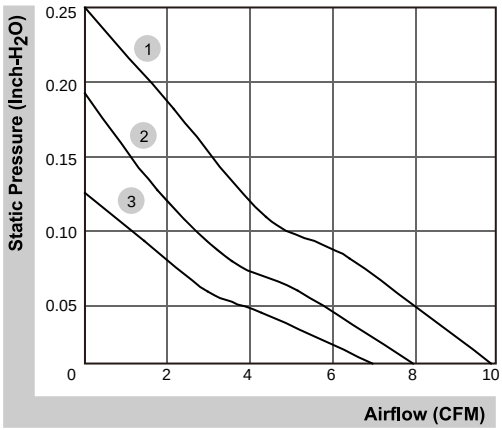

External dimensions(mm)

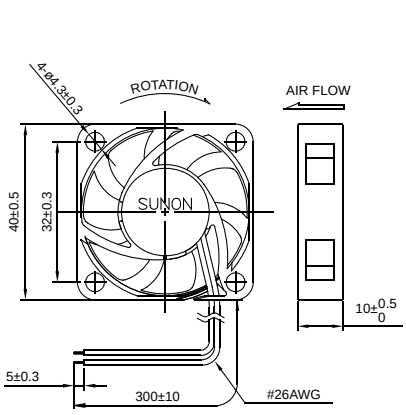

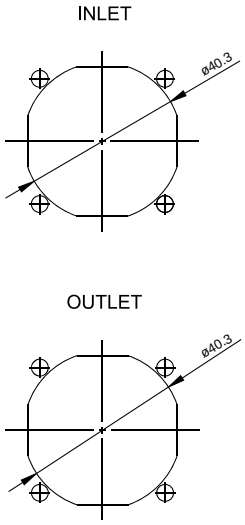

*All model could be customized. Please contact with Sunon Sales

Beijing Hengrui Mechanical and Electrical Equipment Co,Ltd
+86 10-62547612
zhangyu@bjhengrui.cn
en.bjhengrui.com