K3G250-PR02-J2

EC centrifugal module - RadiPac

backward-curved, single-intake

with support bracket

Beijing Hengrui Mechanical and Electrical Equipment Co,Ltd
Phone +86 10-62547612
zhangyu@bjhengrui.cn
en.bjhengrui.com

Nominal data

Type	**K3G250-PR02-J2**
Motor	**M3G084-DF**

Phase		3~
Nominal voltage	VAC	400
Nominal voltage range	VAC	380 .. 480
Frequency	Hz	50/60
Method of obtaining data		ml
Speed (rpm)	min^{-1}	4000
Power consumption	W	1180
Current draw	A	1.8
Min. ambient temperature	°C	-25
Max. ambient temperature	°C	50

ml = Max. load · me = Max. efficiency · fa = Free air · cs = Customer specification · ce = Customer equipment
Subject to change

Data according to Commission Regulation (EU) 327/2011 (EN 17166)

		Actual	Req. 2015
01 Overall efficiency η_{es}	%	65.6	52.1
02 Measurement category		A	
03 Efficiency category		Static	
04 Efficiency grade N		75.5	62
05 Variable speed drive		Yes	

09 Power consumption P_{ed}	kW	1.14
09 Air flow q_v	m³/h	2405
09 Pressure increase p_{fs}	Pa	1042
10 Speed (rpm) n	min^{-1}	3985
11 Specific ratio*		1.01

Data obtained at optimum efficiency level.

* Specific ratio = 1 + p_{fs} / 100 000 Pa

LU-174905

The efficiency values displayed for achieving conformity with the Ecodesign Regulation EU 327/2011 has been reached with defined air duct components (e.g. inlet rings).
The dimensions must be requested from ebm-papst. If other air conduction geometries are used on the installation side, the ebm-papst evaluation loses its validity/the conformity must be confirmed again.

The product does not fall within the scope of Regulation (EU) 2019/1781 due to the exception specified in Article 2 (2a) (motors completely integrated into a product).

EC centrifugal module - RadiPac

backward-curved, single-intake

with support bracket

Technical description

Weight	9.1 kg
Size	250 mm
Motor size	84
Rotor surface	Painted black
Electronics housing material	Die-cast aluminum
Impeller material	PA plastic
Support plate material	Sheet steel, galvanized
Support bracket material	Steel, painted black
Inlet nozzle material	Sheet steel, galvanized
Number of blades	6
Direction of rotation	Clockwise, viewed toward rotor
Degree of protection	IP55
Insulation class	"F"
Moisture (F) / Environmental (H) protection class	H1
Max. permitted ambient temp. for motor (transport/storage)	+ 80 °C
Min. permitted ambient temp. for motor (transport/storage)	- 40 °C
Installation position	Shaft horizontal or rotor on bottom; rotor on top on request
Condensation drainage holes	On rotor side
Mode	S1
Motor bearing	Ball bearing
Technical features	- Output 10 VDC, max. 10 mA - Operation and alarm display - External 24 V input (parameter setting) - Alarm relay - Integrated PID controller - Motor current limitation - PFC, passive - RS-485 MODBUS-RTU - Soft start - EEPROM write cycles: 100,000 maximum - Control input 0-10 VDC / PWM - Control interface with SELV potential safely disconnected from the mains - Thermal overload protection for electronics/motor - Line undervoltage / phase failure detection
EMC immunity to interference	According to EN 61000-6-2 (industrial environment)
EMC interference emission	According to EN 61000-6-3 (household environment), except EN 61000-3-2 for professionally used equipment with a total rated power greater than 1 kW
Touch current according to IEC 60990 (measuring circuit Fig. 4, TN system)	<= 3.5 mA
Motor protection	Thermal overload protector (TOP) internally connected
With cable	Variable
Protection class	I (with customer connection of protective earth)
Conformity with standards	EN 61800-5-1; EN 60335-1; UKCA; CE
Approval	EAC; CSA C22.2 No. 77 + CAN/CSA-E60730-1; UL 1004-7 + 60730-1; CCC

Beijing Hengrui Mechanical and Electrical Equipment Co,Ltd Phone +86 10-62547612 · Fax +86 10-62547612 · zhangyu@bjhengrui.cn · en.bjhengrui.com

EC centrifugal module - RadiPac

backward-curved, single-intake

with support bracket

Product drawing

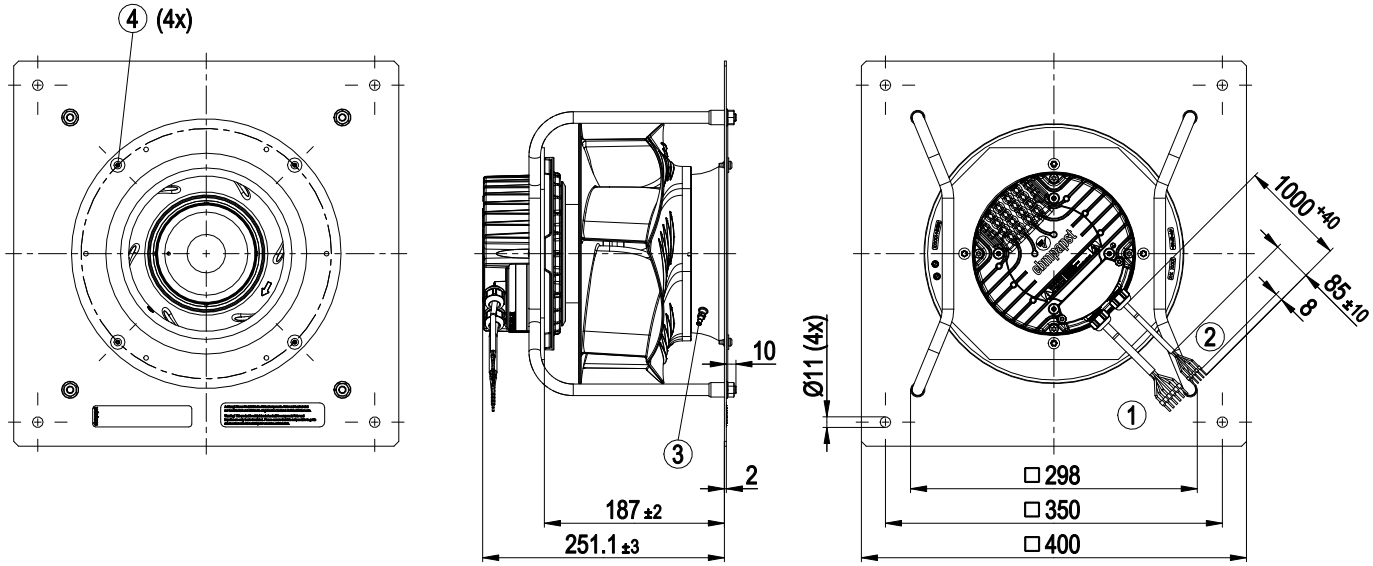

1	Cable PVC AWG18
	6x wire-end ferrule
2	Cable PVC AWG22
	5x wire-end ferrule
3	Inlet ring with pressure tap (k-factor: 76)
4	Attachment for inlet ring and FlowGrid (20280-2-2957 not included in scope of delivery)

Beijing Hengrui Mechanical and Electrical Equipment Co,Ltd Phone +86 10-62547612 · Fax +86 10-62547612 · zhangyu@bjhengrui.cn · en.bjhengrui.com

EC centrifugal module - RadiPac

backward-curved, single-intake

with support bracket

Connection diagram

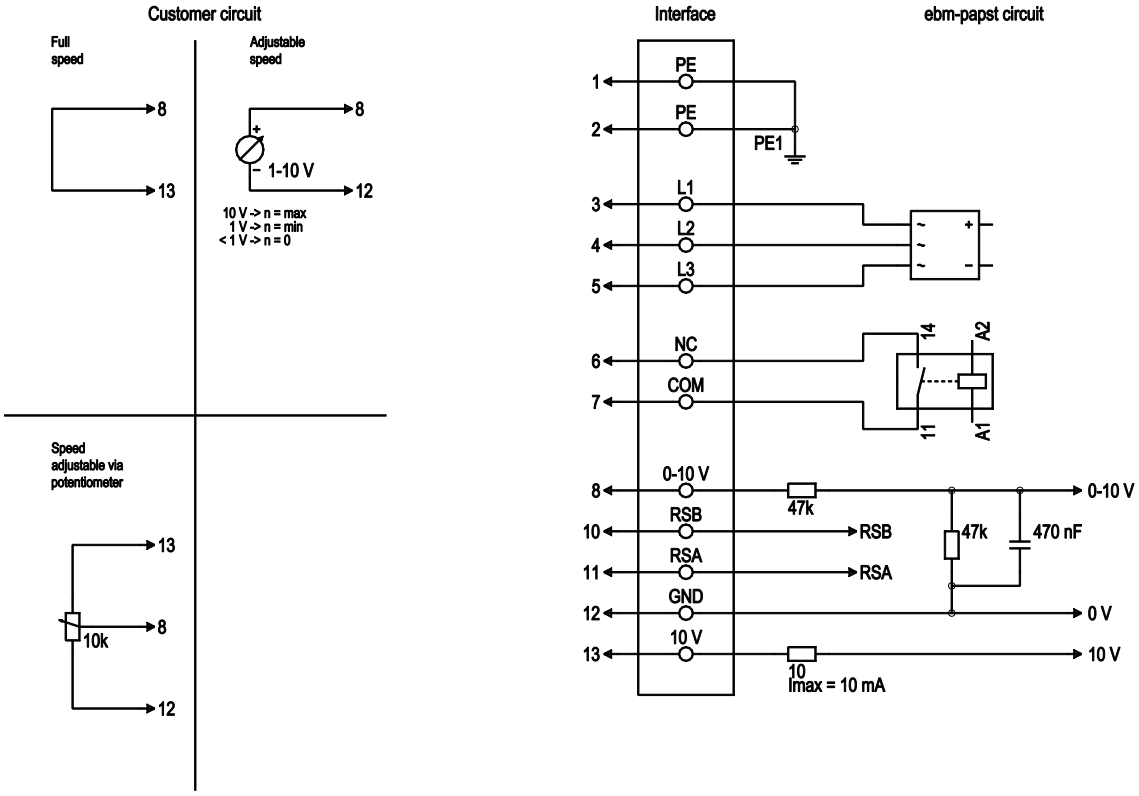

No.	Conn.	Designation	Color	Function/assignment
1	1, 2	PE	green/yellow	Protective earth
1	3	L1	black	Power supply
1	4	L2	black	Power supply
1	5	L3	black	Power supply
1	6	NC	white 1	Status relay, floating status contact, break for failure, contact rating 250 VAC / 2 A (AC1) / min. 10 mA; reinforced insulation on supply side and basic insulation on control interface side
1	7	COM	white 2	Status relay, floating status contact, break for failure, contact rating 250 VAC / 2 A (AC1) / min. 10 mA; reinforced insulation on supply side and basic insulation on control interface side
2	8	0-10V	yellow	Analog input (set value), 0-10 V, Ri = 100 kΩ, adjustable curve, SELV
2	10	RSB	brown	RS485 interface for MODBUS, RSB; SELV
2	11	RSA	white	RS485 interface for MODBUS, RSA; SELV
2	12	GND	blue	Reference ground for control interface, SELV
2	13	+10V	red	Fixed voltage output 10 VDC, +10 V ±3%, max. 10 mA, short-circuit-proof power supply for external devices (e.g. pot), SELV fixed voltage input 24 VDC for setting parameters via MODBUS without line voltage supply

Beijing Hengrui Mechanical and Electrical Equipment Co,Ltd Phone +86 10-62547612 · Fax +86 10-62547612 · zhangyu@bjhengrui.cn · en.bjhengrui.com

EC centrifugal module - RadiPac

backward-curved, single-intake

with support bracket

Curves: Air performance 50 Hz

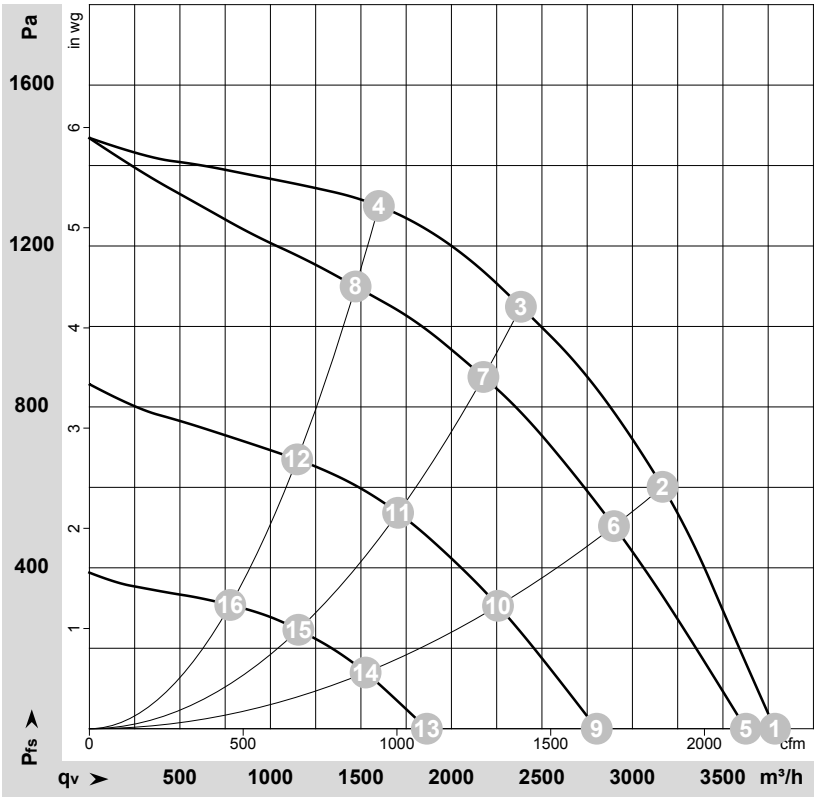

ρ = 1.15 kg/m³ ± 2 %

Measurement: LU-174905-1

Air performance measured according to ISO 5801 installation category A. For detailed information on the measurement setup, contact ebm-papst. Intake sound level: Sound power level according to ISO 13347 / sound pressure level measured at 1 m distance from fan axis. The values given are valid under the specified measuring conditions and may vary due to conditions of installation. For deviations from the standard configuration, the parameters have to be checked on the installed unit.

Measured values

	U	f	n	P_{ed}	I	LpA_{in}	LwA_{in}	q_V	p_{fs}	q_V	p_{fs}
	V	Hz	min^{-1}	W	A	dB(A)	dB(A)	m^3/h	Pa	cfm	in. wg
1	400	50	4000	816	1.27	84	91	3785	0	2230	0.00
2	400	50	4000	1114	1.72	79	86	3165	600	1865	2.41
3	400	50	4000	1180	1.80	75	83	2385	1050	1405	4.22
4	400	50	4000	1061	1.64	76	83	1600	1300	940	5.22
5	400	50	3835	719	1.13	83	90	3625	0	2135	0.00
6	400	50	3665	865	1.34	77	84	2900	504	1705	2.02
7	400	50	3660	885	1.37	73	81	2175	875	1280	3.51
8	400	50	3700	840	1.31	72	81	1470	1099	865	4.41
9	400	50	2965	354	0.61	76	85	2805	0	1650	0.00
10	400	50	2875	433	0.72	70	78	2255	308	1330	1.24
11	400	50	2860	442	0.73	65	72	1705	538	1005	2.16
12	400	50	2885	415	0.69	67	75	1150	670	675	2.69
13	400	50	1995	131	0.32	65	73	1865	0	1095	0.00
14	400	50	1960	158	0.36	60	67	1525	140	900	0.56
15	400	50	1955	162	0.36	55	63	1155	246	680	0.99
16	400	50	1965	153	0.35	57	64	780	308	460	1.24

U = Voltage · f = Frequency · n = Speed (rpm) · P_{ed} = Power consumption · I = Current draw · LpA_{in} = Sound pressure level intake side · LwA_{in} = Sound power level intake side
q_V = Air flow · p_{fs} = Pressure increase

Beijing Hengrui Mechanical and Electrical Equipment Co,Ltd Phone +86 10-62547612 · Fax +86 10-62547612 · zhangyu@bjhengrui.cn · en.bjhengrui.com