K3G280-RR03-H2

EC centrifugal module - RadiCal

backward-curved, single-intake

with support bracket

Beijing Hengrui Mechanical and Electrical Equipment Co,Ltd
Phone +86 10-62547612
zhangyu@bjhengrui.cn
en.bjhengrui.com

Nominal data

Type	**K3G280-RR03-H2**
Motor	**M3G084-DF**

Phase		1~
Nominal voltage	VAC	230
Nominal voltage range	VAC	200 .. 277
Frequency	Hz	50/60
Method of obtaining data		ml
Speed (rpm)	min^{-1}	2700
Power consumption	W	500
Current draw	A	2.2
Min. ambient temperature	°C	-25
Max. ambient temperature	°C	60

ml = Max. load · me = Max. efficiency · fa = Free air · cs = Customer specification · ce = Customer equipment
Subject to change

Data according to Commission Regulation (EU) 327/2011 (EN 17166)

		Actual	Req. 2015
01 Overall efficiency η_{es}	%	65.5	48.5
02 Measurement category		A	
03 Efficiency category		Static	
04 Efficiency grade N		79	62
05 Variable speed drive		Yes	

09 Power consumption P_{ed}	kW	0.52
09 Air flow q_v	m³/h	2000
09 Pressure increase p_{fs}	Pa	555
10 Speed (rpm) n	min^{-1}	2660
11 Specific ratio*		1.01

Data obtained at optimum efficiency level.

* Specific ratio = 1 + p_{fs} / 100 000 Pa

LU-159791

The efficiency values displayed for achieving conformity with the Ecodesign Regulation EU 327/2011 has been reached with defined air duct components (e.g. inlet rings).
The dimensions must be requested from ebm-papst. If other air conduction geometries are used on the installation side, the ebm-papst evaluation loses its validity/the conformity must be confirmed again.

The product does not fall within the scope of Regulation (EU) 2019/1781 due to the exception specified in Article 2 (2a) (motors completely integrated into a product).

EC centrifugal module - RadiCal

backward-curved, single-intake

with support bracket

Technical description

Weight	7.92 kg
Size	280 mm
Motor size	84
Rotor surface	Painted black
Electronics housing material	Die-cast aluminum
Impeller material	PP plastic
Support plate material	Sheet steel, galvanized
Support bracket material	Steel, painted black
Inlet nozzle material	Sheet steel, galvanized
Number of blades	6
Direction of rotation	Clockwise, viewed toward rotor
Degree of protection	IP55
Insulation class	"F"
Moisture (F) / Environmental (H) protection class	H1
Max. permitted ambient temp. for motor (transport/storage)	+80 °C
Min. permitted ambient temp. for motor (transport/storage)	-40 °C
Installation position	Shaft horizontal or rotor on bottom; rotor on top on request
Condensation drainage holes	On rotor side
Mode	S1
Motor bearing	Ball bearing; (sealed)
Technical features	- Output 10 VDC, max. 10 mA - Operation and alarm display - Alarm relay - Integrated PID controller - Power limiter - Motor current limitation - PFC, active - RS-485 MODBUS-RTU - Soft start - Control input 0-10 VDC / PWM - Control interface with SELV potential safely disconnected from supply - Thermal overload protection for electronics/motor - Line undervoltage / phase failure detection
EMC immunity to interference	According to EN 61000-6-2 (industrial environment)
EMC circuit feedback	According to EN 61000-3-2/3
EMC interference emission	According to EN 61000-6-3 (household environment)
Touch current according to IEC 60990 (measuring circuit Fig. 4, TN system)	<= 3.5 mA
Motor protection	Thermal overload protector (TOP) internally connected
With cable	Variable

Beijing Hengrui Mechanical and Electrical Equipment Co,Ltd Phone +86 10-62547612 · Fax +86 10-62547612 · zhangyu@bjhengrui.cn · en.bjhengrui.com

Protection class assignment	I; If a protective earth is connected by the customer This component for installation may have several local protection classes. This information relates to this component's basic design. The final protection class is based on the component's intended installation and connection.
Conformity with standards	EN 60335-1; EN 61800-5-1; CE
Approval	CSA C22.2 No. 77 + CAN/CSA-E60730-1; CCC; EAC; UL 1004-7 + 60730-1

Beijing Hengrui Mechanical and Electrical Equipment Co,Ltd Phone +86 10-62547612 · Fax +86 10-62547612 · zhangyu@bjhengrui.cn · en.bjhengrui.com

EC centrifugal module - RadiCal

backward-curved, single-intake

with support bracket

Product drawing

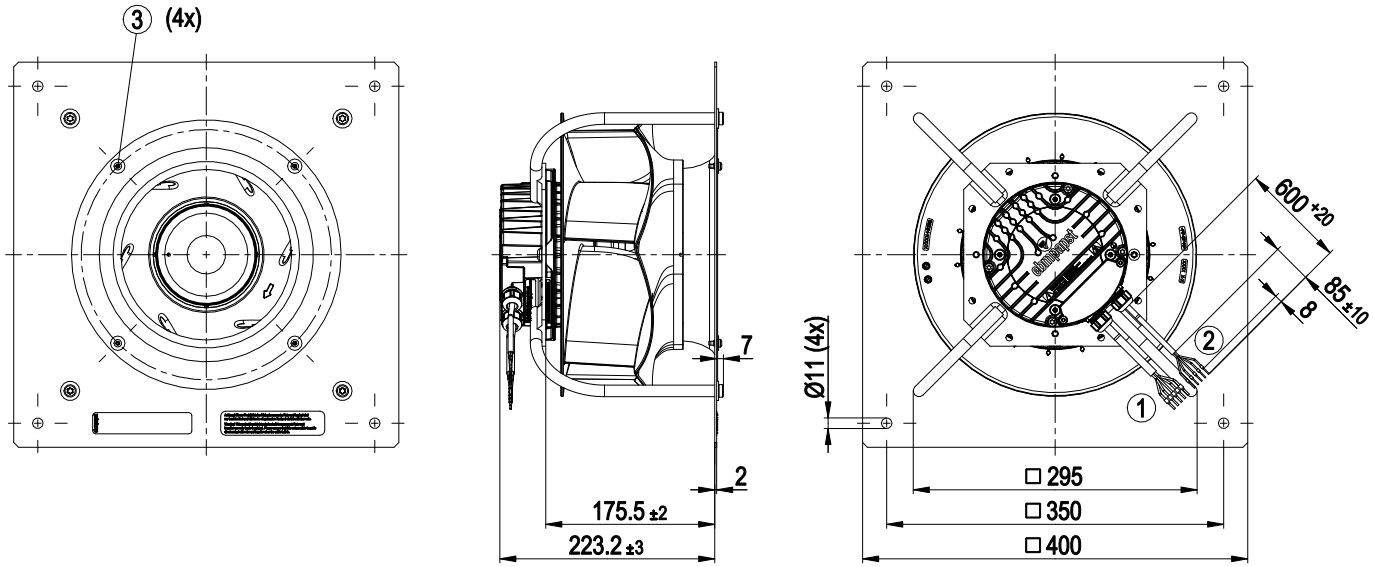

1	Cable PVC AWG18
	5x wire-end ferrule
2	Cable PVC AWG22
	5x wire-end ferrule
3	Attachment for inlet ring and FlowGrid (20280-2-2957 not included in scope of delivery)

Beijing Hengrui Mechanical and Electrical Equipment Co,Ltd Phone +86 10-62547612 · Fax +86 10-62547612 · zhangyu@bjhengrui.cn · en.bjhengrui.com

EC centrifugal module - RadiCal

backward-curved, single-intake

with support bracket

Connection diagram

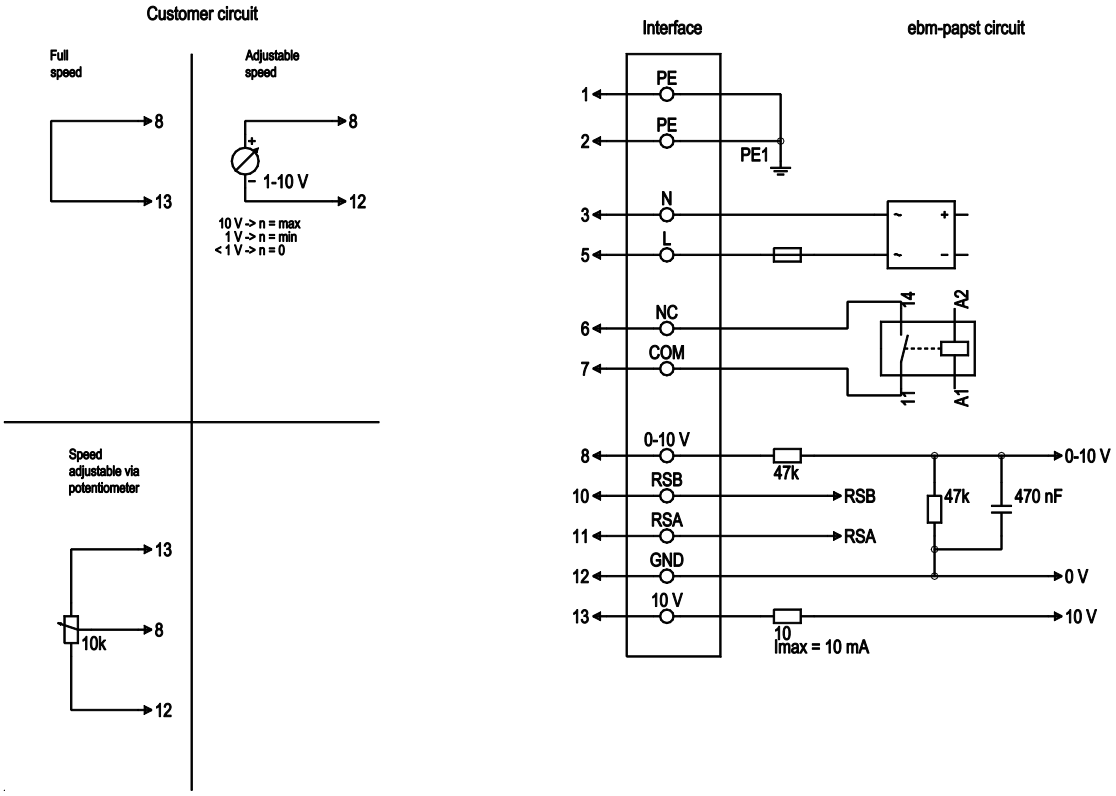

No.	Conn.	Designation	Color	Function/assignment
1	1, 2	PE	green/yellow	Protective earth
1	3	N	blue	Power supply, neutral conductor, 50/60 Hz
1	5	L	black	Power supply, phase, 50/60 Hz
1	6	NC	white 1	Status relay, floating status contact; break for failure, contact rating 250 VAC / 2A (AC1) / min. 10 mA, basic insulation on supply side and reinforced insulation on control interface side
1	7	COM	white 2	Status relay, floating status contact; common connection, contact rating 250 VAC / 2A (AC1) / min. 10 mA, basic insulation on supply side and reinforced insulation on control interface side
2	8	0-10V	yellow	Analog input (set value); 0-10 V; Ri = 100 kΩ; adjustable curve
2	10	RSB	brown	RS485 interface for MODBUS, RSB
2	11	RSA	white	RS485 interface for MODBUS, RSA
2	12	GND	blue	Reference ground for control interface, SELV
2	13	+10V	red	Fixed voltage output 10 VDC, +10 V ±3%; max. 10 mA; short-circuit-proof; power supply for external devices (e.g. pot)

Beijing Hengrui Mechanical and Electrical Equipment Co,Ltd Phone +86 10-62547612 · Fax +86 10-62547612 · zhangyu@bjhengrui.cn · en.bjhengrui.com

EC centrifugal module - RadiCal

backward-curved, single-intake

with support bracket

Curves: Air performance 50 Hz

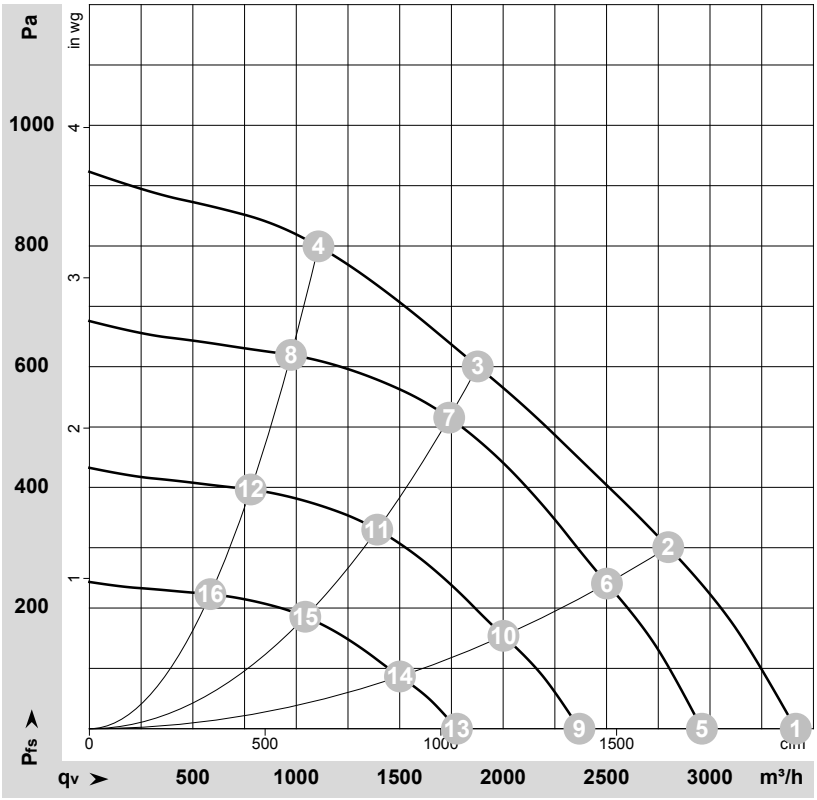

ρ = 1.15 kg/m³ ± 2 %

Measurement: LU-149673-1

Air performance measured according to ISO 5801 installation category A. For detailed information on the measurement setup, contact ebm-papst. Intake sound level: Sound power level according to ISO 13347 / sound pressure level measured at 1 m distance from fan axis. The values given are valid under the specified measuring conditions and may vary due to conditions of installation. For deviations from the standard configuration, the parameters have to be checked on the installed unit.

Measured values

	U	f	n	P_{ed}	I	LpA_{in}	LwA_{in}	q_V	p_{fs}	q_V	p_{fs}
	V	Hz	min^{-1}	W	A	dB(A)	dB(A)	m^3/h	Pa	cfm	in. wg
1	230	50	2885	460	2.01	77	85	3415	0	2010	0.00
2	230	50	2795	500	2.20	72	80	2800	300	1645	1.20
3	230	50	2700	500	2.20	66	73	1875	600	1105	2.41
4	230	50	2840	500	2.20	72	79	1105	800	650	3.21
5	230	50	2500	300	1.31	74	81	2960	0	1745	0.00
6	230	50	2500	367	1.60	69	77	2500	240	1475	0.96
7	230	50	2500	410	1.78	64	71	1740	516	1025	2.07
8	230	50	2500	343	1.50	68	76	975	620	575	2.49
9	230	50	2000	154	0.67	68	76	2370	0	1395	0.00
10	230	50	2000	188	0.82	64	71	2000	154	1180	0.62
11	230	50	2000	210	0.91	58	66	1390	331	820	1.33
12	230	50	2000	176	0.77	63	70	780	397	460	1.59
13	230	50	1500	65	0.28	61	68	1775	0	1045	0.00
14	230	50	1500	79	0.35	57	64	1500	87	885	0.35
15	230	50	1500	88	0.39	51	59	1045	186	615	0.75
16	230	50	1500	74	0.32	55	63	585	223	345	0.90

U = Voltage · f = Frequency · n = Speed (rpm) · P_{ed} = Power consumption · I = Current draw · LpA_{in} = Sound pressure level intake side · LwA_{in} = Sound power level intake side
q_V = Air flow · p_{fs} = Pressure increase

Beijing Hengrui Mechanical and Electrical Equipment Co,Ltd Phone +86 10-62547612 · Fax +86 10-62547612 · zhangyu@bjhengrui.cn · en.bjhengrui.com