K3G400-AQ23-01

EC centrifugal module - RadiPac

backward-curved, single-intake

with support bracket

Beijing Hengrui Mechanical and Electrical Equipment Co,Ltd
Phone +86 10-62547612
zhangyu@bjhengrui.cn
en.bjhengrui.com

Nominal data

Type	**K3G400-AQ23-01**
Motor	**M3G150-FF**

Phase		3~
Nominal voltage	VAC	400
Nominal voltage range	VAC	380 .. 480
Frequency	Hz	50/60
Method of obtaining data		ml
Speed (rpm)	min^{-1}	2550
Power consumption	W	3000
Current draw	A	4.6
Min. ambient temperature	°C	-25
Max. ambient temperature	°C	60

ml = Max. load · me = Max. efficiency · fa = Free air · cs = Customer specification · ce = Customer equipment
Subject to change

Data according to Commission Regulation (EU) 327/2011

		Actual	Req. 2015
01 Overall efficiency η_{es}	%	62.8	56.4
02 Measurement category		A	
03 Efficiency category		Static	
04 Efficiency grade N		68.4	62
05 Variable speed drive		Yes	

09 Power consumption P_{ed}	kW	2.95
09 Air flow q_v	m³/h	5960
09 Pressure increase p_{fs}	Pa	1064
10 Speed (rpm) n	min^{-1}	2540
11 Specific ratio*		1.01

Data obtained at optimum efficiency level.
The ErP data is determined using a motor-impeller combination in a standardized measurement setup.

* Specific ratio = 1 + p_{fs} / 100 000 Pa

LU-121371

EC centrifugal module - RadiPac

backward-curved, single-intake

with support bracket

Technical description

Weight	32.5 kg
Size	400 mm
Motor size	150
Rotor surface	Painted black
Electronics housing material	Die-cast aluminum
Impeller material	Sheet aluminum
Support plate material	Sheet steel, galvanized
Support bracket material	Steel, painted black
Inlet nozzle material	Sheet steel, galvanized
Number of blades	7
Direction of rotation	Clockwise, viewed toward rotor
Degree of protection	IP55
Insulation class	"F"
Moisture (F) / Environmental (H) protection class	H1
Max. permitted ambient temp. for motor (transport/storage)	+80 °C
Min. permitted ambient temp. for motor (transport/storage)	-40 °C
Installation position	See product drawing
Condensation drainage holes	On rotor side
Mode	S1
Motor bearing	Ball bearing
Technical features	- Output 10 VDC, max. 10 mA - Output 20 VDC, max. 50 mA - Output for slave 0-10 V - Input for sensor 0-10 V or 4-20 mA - External 24 V input (parameter setting) - External release input - Alarm relay - Integrated PID controller - Power limiter - Motor current limitation - PFC, passive - RS-485 MODBUS-RTU - Soft start - EEPROM write cycles: 100,000 maximum - Control input 0-10 VDC / PWM - Control interface with SELV potential safely disconnected from the mains - Thermal overload protection for electronics/motor - Line undervoltage / phase failure detection
EMC immunity to interference	According to EN 61000-6-2 (industrial environment)
EMC interference emission	According to EN 61000-6-3 (household environment)
Touch current according to IEC 60990 (measuring circuit Fig. 4, TN system)	<= 3.5 mA
Electrical hookup	Terminal box
Motor protection	Reverse polarity and locked-rotor protection
Protection class	I (with customer connection of protective earth)

Beijing Hengrui Mechanical and Electrical Equipment Co,Ltd Phone +86 10-62547612 · Fax +86 10-62547612 · zhangyu@bjhengrui.cn · en.bjhengrui.com

Conformity with standards	EN 61800-5-1; CE
Approval	CSA C22.2 No. 77 + CAN/CSA-E60730-1; EAC; UL 1004-7 + 60730-1

Beijing Hengrui Mechanical and Electrical Equipment Co,Ltd Phone +86 10-62547612 · Fax +86 10-62547612 · zhangyu@bjhengrui.cn · en.bjhengrui.com

EC centrifugal module - RadiPac

backward-curved, single-intake

with support bracket

Product drawing

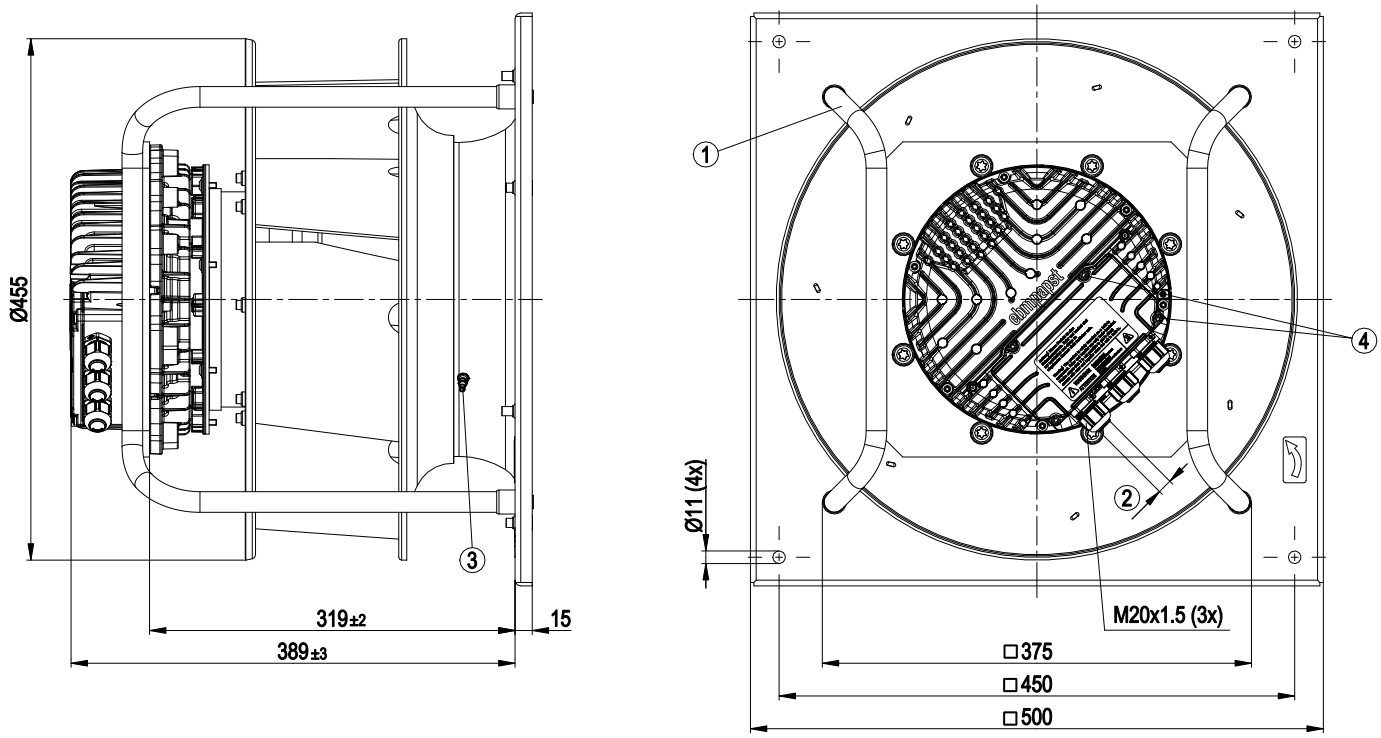

1	Installation position: shaft horizontal (only install support struts vertically as illustrated) or rotor on bottom; rotor on top on request
2	Cable diameter min. 4 mm, max. 10 mm; tightening torque 4±0.6 Nm
3	Inlet ring with pressure tap (k-factor: 188)
4	Tightening torque 3.5 ± 0.5 Nm

Beijing Hengrui Mechanical and Electrical Equipment Co,Ltd Phone +86 10-62547612 · Fax +86 10-62547612 · zhangyu@bjhengrui.cn · en.bjhengrui.com

EC centrifugal module - RadiPac

backward-curved, single-intake

with support bracket

Connection diagram

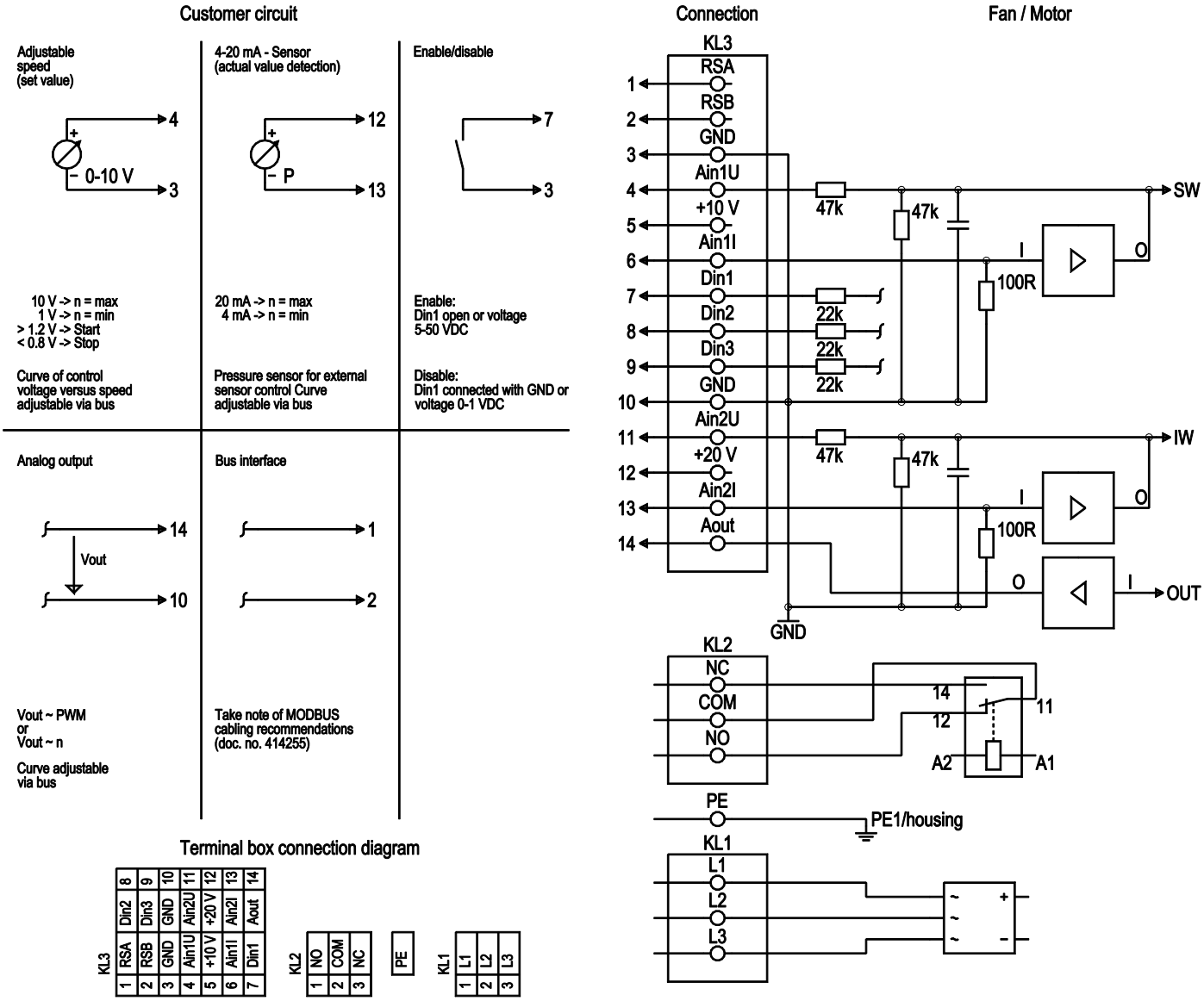

Terminal box connection diagram

No.	Conn.	Designation	Function/assignment
KL 1	1	L1	Supply connection, power supply; for nominal voltage range see technical data
KL 1	2	L2	Supply connection, power supply; for nominal voltage range see technical data
KL 1	3	L3	Supply connection, power supply; for nominal voltage range see technical data
PE		PE	Ground connection, PE connection
KL 2	1	NO	Status relay, floating status contact, make for failure
KL2	2	COM	Status relay, floating status contact, changeover contact, common connection, contact rating 250 VAC / max. 2 A (AC1) / min. 10 mA
KL2	3	NC	Status relay, floating status contact, break for failure
KL 3	1	RSA	Bus connection RS485, RSA, MODBUS-RTU; SELV
KL 3	2	RSB	Bus connection RS485, RSB, MODBUS-RTU; SELV
KL 3	3 / 10	GND	Reference ground for control interface; SELV
KL 3	4	Ain1 U	Analog input 1, set value: 0-10 V, Ri = 100 kΩ, adjustable curve, only usable as alternative to input Ain1I; SELV

Beijing Hengrui Mechanical and Electrical Equipment Co,Ltd Phone +86 10-62547612 · Fax +86 10-62547612 · zhangyu@bjhengrui.cn · en.bjhengrui.com

No.	Conn.	Designation	Function/assignment
KL 3	5	+ 10 V	Fixed voltage output 10 VDC, +10 V ±3%, max. 10 mA, short-circuit-proof power supply for external devices (e.g. pot); SELV
KL 3	6	Ain1 I	Analog input 1, set value: 4-20 mA, Ri = 100 Ω, adjustable curve, only usable as alternative to input Ain1U; SELV
KL 3	7	Din1	Digital input 1: enable electronics, enable: pin open or applied voltage 5-50 VDC disable: bridge to GND or applied voltage < 1 VDC reset function: triggers software reset after a level change to < 1 VDC; SELV
KL 3	8	Din2	Digital input 2: Switching parameter sets 1/2, according to EEPROM setting, the valid or used parameter set can be selected via bus or via digital input DIN2. Parameter set 1: pin open or applied voltage 5-50 VDC Parameter set 2: bridge to GND or applied voltage < 1 VDC; SELV
KL 3	9	Din3	Digital input 3: according to EEPROM setting, the integrated controller's direction of action can be selected via bus or digital input Din3; normal: pin open or applied voltage 5-50 VDC inverse: bridge to GND or applied voltage < 1 VDC; SELV
KL 3	11	Ain2 U	Analog input 2, measured value: 0-10 V, Ri = 100 kΩ, adjustable curve, only usable as alternative to input Ain2I; SELV
KL 3	12	+ 20 V	Fixed voltage output 20 VDC, +20 V +25/-10%, max. 50 mA, short-circuit-proof power supply for external devices (e.g. sensors); SELV or: +24 VDC input for parameter setting without line voltage
KL 3	13	Ain2 I	Analog input 2, measured value: 4-20 mA, Ri = 100 Ω, adjustable curve, only usable as alternative to input Ain2U; SELV
KL 3	14	Aout	Analog output 0-10 VDC, max. 5 mA, output of current motor modulation level / motor speed adjustable curve; SELV

Beijing Hengrui Mechanical and Electrical Equipment Co,Ltd Phone +86 10-62547612 · Fax +86 10-62547612 · zhangyu@bjhengrui.cn · en.bjhengrui.com

EC centrifugal module - RadiPac

backward-curved, single-intake

with support bracket

Curves: Air performance 50 Hz

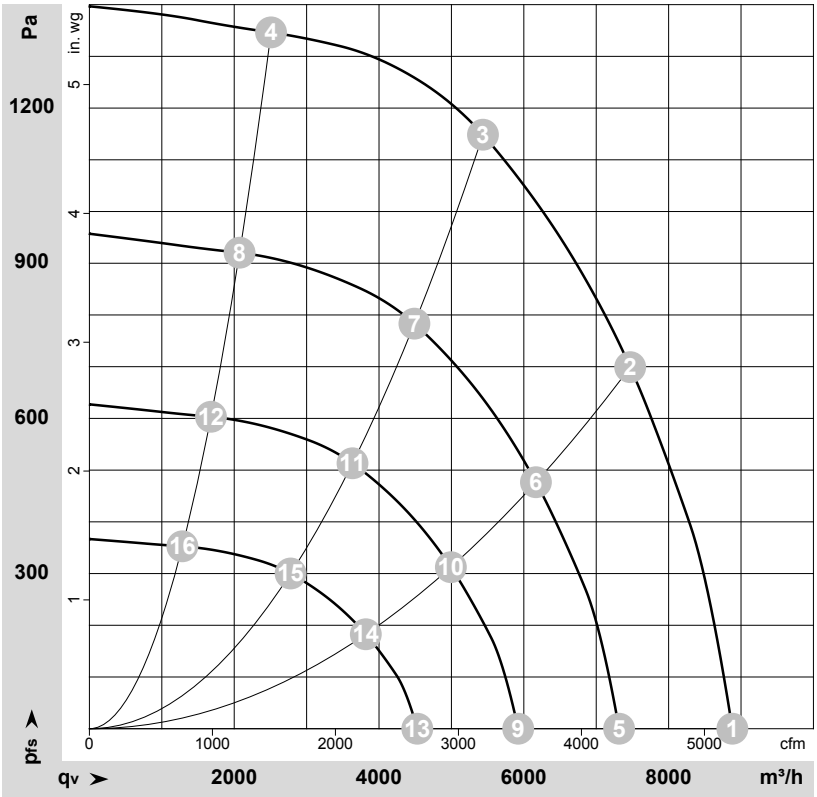

ρ = 1.15 kg/m³ ± 2 %

Measurement: LU-121371-1

Air performance measured according to ISO 5801 installation category A. For detailed information on the measurement setup, contact ebm-papst. Intake sound level: Sound power level according to ISO 13347 / sound pressure level measured at 1 m distance from fan axis. The values given are valid under the specified measuring conditions and may vary due to conditions of installation. For deviations from the standard configuration, the parameters have to be checked on the installed unit.

Measured values

	Wired	U	f	n	P_{ed}	I	LpA_{in}	LwA_{in}	LwA_{out}	q_V	p_{fs}	q_V	p_{fs}
		V	Hz	min^{-1}	W	A	dB(A)	dB(A)	dB(A)	m^3/h	Pa	cfm	in. wg
1	3~	400	50	2550	1972	3.02	86	93	99	8880	0	5225	0.00
2	3~	400	50	2550	2730	4.19	80	87	94	7470	700	4395	2.81
3	3~	400	50	2550	3000	4.60	78	85	92	5435	1150	3200	4.62
4	3~	400	50	2550	2328	3.57	83	90	96	2510	1350	1475	5.42
5	3~	400	50	2100	1103	1.69	81	88	94	7315	0	4305	0.00
6	3~	400	50	2100	1535	2.36	75	82	89	6165	481	3630	1.93
7	3~	400	50	2100	1665	2.55	73	80	87	4490	783	2640	3.14
8	3~	400	50	2100	1316	2.02	78	85	92	2075	920	1220	3.69
9	3~	400	50	1700	585	0.90	76	83	89	5920	0	3485	0.00
10	3~	400	50	1700	814	1.25	69	77	83	4995	315	2940	1.26
11	3~	400	50	1700	883	1.35	68	75	82	3635	513	2140	2.06
12	3~	400	50	1700	698	1.07	72	80	86	1680	603	990	2.42
13	3~	400	50	1300	262	0.40	69	76	82	4530	0	2665	0.00
14	3~	400	50	1300	364	0.56	63	70	77	3820	184	2245	0.74
15	3~	400	50	1300	395	0.60	61	68	75	2780	300	1635	1.20
16	3~	400	50	1300	312	0.48	66	73	80	1285	353	755	1.42

Wired = Wiring · U = Voltage · f = Frequency · n = Speed (rpm) · P_{ed} = Power consumption · I = Current draw · LpA_{in} = Sound pressure level intake side · LwA_{in} = Sound power level intake side LwA_{out} = Sound power level outlet side · q_V = Air flow · p_{fs} = Pressure increase

Beijing Hengrui Mechanical and Electrical Equipment Co,Ltd Phone +86 10-62547612 · Fax +86 10-62547612 · zhangyu@bjhengrui.cn · en.bjhengrui.com