K3G630-RB32-03

EC centrifugal module - RadiCal

backward-curved, single-intake

with support bracket

Beijing Hengrui Mechanical and Electrical Equipment Co,Ltd
Phone +86 10-62547612
zhangyu@bjhengrui.cn
en.bjhengrui.com

Nominal data

Type	**K3G630-RB32-03**
Motor	**M3G150-IF**

Phase		3~
Nominal voltage	VAC	400
Nominal voltage range	VAC	380 .. 480
Frequency	Hz	50/60
Method of obtaining data		ml
Status		prelim.
Speed (rpm)	min^{-1}	1400
Power consumption	W	3600
Current draw	A	5.5
Min. ambient temperature	°C	-40
Max. ambient temperature	°C	40

ml = Max. load · me = Max. efficiency · fa = Free air · cs = Customer specification · ce = Customer equipment
Subject to change

Occasional start-up at temperatures between -40 °C and -25 °C is permitted. For continuous operation at ambient temperatures below -25 °C (such as refrigeration applications), a fan design with special low-temperature bearings must be used.

Data according to Commission Regulation (EU) 327/2011 (EN 17166)

		Actual	Req. 2015
01 Overall efficiency η_{es}	%	63.9	57.3
02 Measurement category		A	
03 Efficiency category		Static	
04 Efficiency grade N		68.6	62
05 Variable speed drive		Yes	

09 Power consumption P_{ed}	kW	3.58
09 Air flow q_v	m³/h	10895
09 Pressure increase p_{fs}	Pa	725
10 Speed (rpm) n	min^{-1}	1405
11 Specific ratio*		1.01

Data obtained at optimum efficiency level.
The ErP data is determined using a motor-impeller combination in a standardized measurement setup.

* Specific ratio = 1 + p_{fs} / 100 000 Pa

LU-181577

EC centrifugal module - RadiCal

backward-curved, single-intake

with support bracket

Technical description

Weight	51.2 kg
Size	630 mm
Motor size	150
Rotor surface	Painted black
Electronics housing material	Die-cast aluminum
Impeller material	PP plastic
Support plate material	Sheet steel, galvanized
Support bracket material	Steel, painted black
Inlet nozzle material	Sheet steel, galvanized
Number of blades	6
Direction of rotation	Clockwise, viewed toward rotor
Degree of protection	IP55
Insulation class	"F"
Moisture (F) / Environmental (H) protection class	H1
Ambient temperature note	Occasional start-up at temperatures between -40°C and -25°C is permitted. For continuous operation at ambient temperatures below -25°C (such as refrigeration applications), use must be made of a fan design with special low-temperature bearings.
Max. permitted ambient temp. for motor (transport/storage)	+80 °C
Min. permitted ambient temp. for motor (transport/storage)	-40 °C
Installation position	See legend on product drawing
Condensation drainage holes	On rotor side
Mode	S1
Motor bearing	Ball bearing
Technical features	- Operation and alarm display with LED - External 15-50 VDC input (parameterization) - Alarm relay - Integrated PI controller - Configurable inputs/outputs (I/O) - MODBUS V6.0 - Motor current limitation - RFID - ISO 15693 compatible - RS-485 MODBUS-RTU - Soft start - Voltage output 3.3-24 VDC, Pmax = 800 mW - Control interface with SELV potential safely disconnected from the mains - Thermal overload protection for electronics/motor - Line undervoltage / phase failure detection
EMC immunity to interference	According to EN 61000-6-2 (industrial environment)
EMC interference emission	According to EN 61000-6-3 (household environment), except EN 61000-3-2 for professionally used equipment with a total rated power greater than 1 kW
Touch current according to IEC 60990 (measuring circuit Fig. 4, TN system)	<= 3.5 mA
Electrical hookup	Terminal box
Motor protection	Reverse polarity and locked-rotor protection
Protection class	I (with customer connection of protective earth)

Beijing Hengrui Mechanical and Electrical Equipment Co,Ltd Phone +86 10-62547612 · Fax +86 10-62547612 · zhangyu@bjhengrui.cn · en.bjhengrui.com

Conformity with standards	EN 61800-5-1; CE
Approval	CSA C22.2 No. 77 + CAN/CSA-E60730-1; EAC; UL 1004-7 + 60730-1

Beijing Hengrui Mechanical and Electrical Equipment Co,Ltd Phone +86 10-62547612 · Fax +86 10-62547612 · zhangyu@bjhengrui.cn · en.bjhengrui.com

EC centrifugal module - RadiCal

backward-curved, single-intake

with support bracket

Product drawing

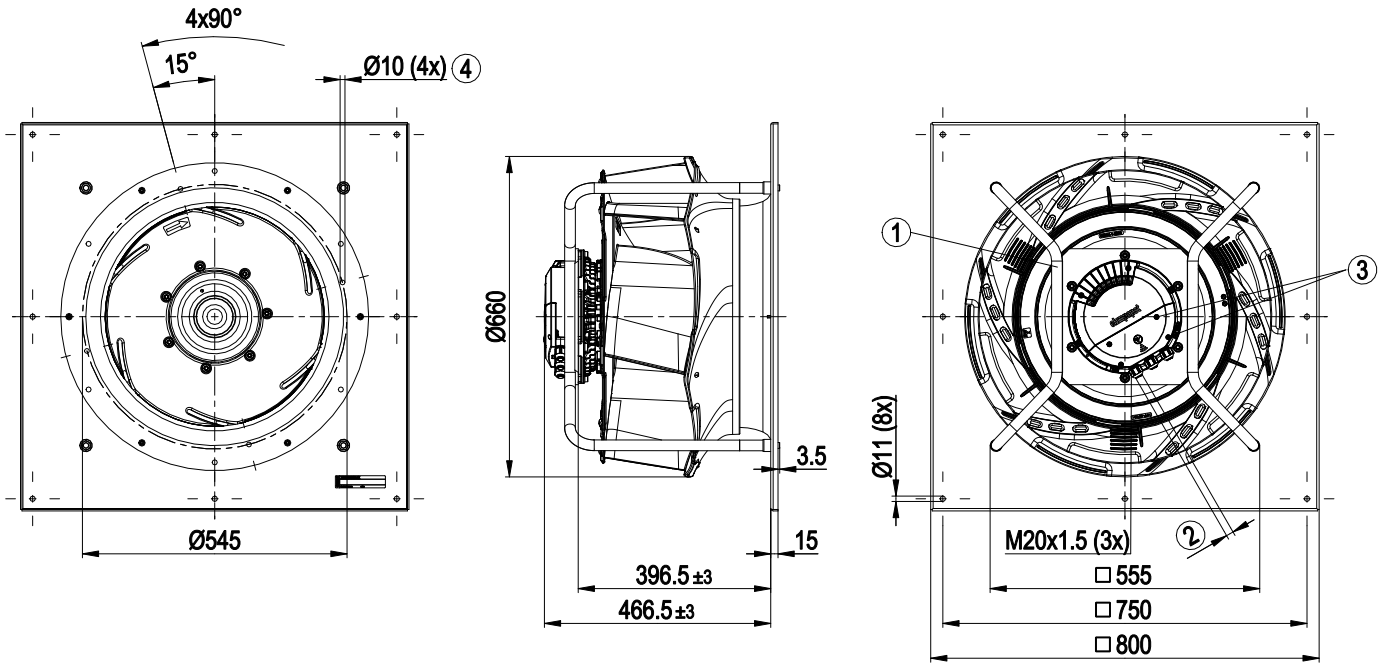

1	Installed position: shaft horizontal (install support struts only vertically as illustrated) or rotor on bottom
2	Cable diameter min. 4 mm, max. 10 mm, tightening torque 4 ± 0.6 Nm
3	Tightening torque 1.5 ± 0.2 Nm
4	Attachment holes for FlowGrid (00630-2-2957 not included in scope of delivery)

Beijing Hengrui Mechanical and Electrical Equipment Co,Ltd Phone +86 10-62547612 · Fax +86 10-62547612 · zhangyu@bjhengrui.cn · en.bjhengrui.com

EC centrifugal module - RadiCal

backward-curved, single-intake

with support bracket

Connection diagram

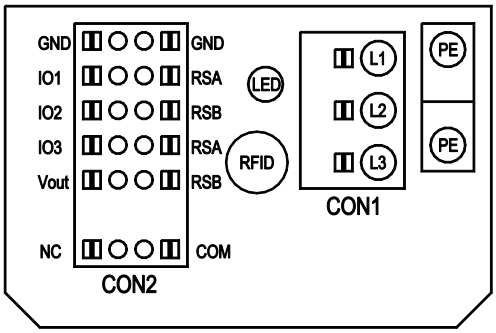

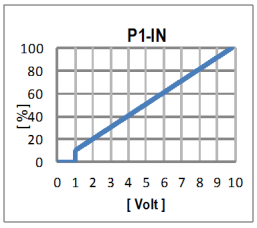

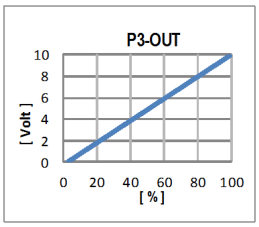

No.	Conn.	Designation	Function/assignment
	CON1	L1, L2, L3	Power supply, phase, see nameplate for voltage range
	PE	PE	Protective earth
	CON2	RSA	RS485 interface for MODBUS, RSA; SELV
	CON2	RSB	RS485 interface for MODBUS, RSB; SELV
	CON2	GND	Reference ground for control interface, SELV
	CON2	IO1	Function parameterizable (see “Optional interface functions” table) Factory setting: Digital input - high active, function: Disable input, SELV - inactive: Pin open or applied voltage < 1.5 VDC - active: applied voltage 3.5-50 VDC Reset function: Triggering of error reset on change of state from "enabled" to "disabled"
	CON2	IO2	Function parameterizable (see “Optional interface functions” table) Factory setting: Analog input 0-10 V / PWM, Ri=100 kΩ, function: Set value Characteristic curve parameterizable (see input characteristic curve P1-IN), SELV
	CON2	IO3	Function parameterizable (see “Optional interface functions” table) Factory setting: Analog output 0-10 V, max. 5 mA, function: Fan modulation level Characteristic curve parameterizable (see output characteristic curve P3-OUT), SELV
	CON2	Vout	Voltage output 3.3-24 VDC ±5%, Pmax=800 mW, voltage parameterizable Factory setting: 10 VDC short-circuit-proof, supply for external devices, SELV alternatively: 15-50 VDC input for parameterization via MODBUS without line voltage
	CON2	COM	Status relay, floating status contact, common connection, contact rating 250 VAC / 2 A (AC1) / min. 10 mA, reinforced insulation on supply side and on control interface side
	CON2	NC	Status relay, floating status contact, break for failure
		LED	green: status = good, ready for operation orange: status = warning red: status = failure
		P1-IN	Input characteristic curve
		P3-OUT	Output characteristic curve

Beijing Hengrui Mechanical and Electrical Equipment Co,Ltd Phone +86 10-62547612 · Fax +86 10-62547612 · zhangyu@bjhengrui.cn · en.bjhengrui.com

Terminal/plug assignment

○ configurable option

For further information and additional functions see EC Control Software, Fan-Set-App, or MODBUS Parameter Specification V6.0

CON2	configurable IO mode	electrical specification	MODBUS Register for IO mode configuration	configurable IO functions: normal / inverse	INPUT																				OUTPUT											
					D101 [...]	D147 [...]	D104 [...]	D12E [...]	D148 [...]	D16C [...]	D16A [...]	(selected directly via IO mode)	D130 [0]	D130 [1]	D130 [2]	D130 [5]	D00C [1]	D130 [4]
					source: set value	source: sensor value	switch: parameter set: #1 / #2	switch: control function: heating (pos.) / cooling (neg.)	switch: direction of rotation: cw / ccw	switch: set value source	switch: fan enable / disable	signal: tach out	signal: diagnostics out	signal: fan modulation level %	signal: actual speed	signal: system modulation level %	signal: remote control output 0-10V	pulse input for auto-adressing	pulse output for auto-adressing
IO1	○ **Din 1 (active high)**: digital input	not active: pin open or applied voltage < 1,5VDC active: applied voltage 3,5-50VDC, SELV	D158 [0]				○	○	○	○	○		○						
	○ **Ain 1 0-10V/PWM**: analog input	Ri=100K, characteristic curve parameterizable, f_{PWM}=1k..10KHz, SELV	D158 [2]		○														
	○ **Tach out** (open collector output)	Umax=50VDC, Imax=20mA SELV	D158 [5]									○							
	○ **Diagnostics out** (open collector output)	Umax=50VDC, Imax=20mA SELV	D158 [6]										○						
IO2	○ **Din 2 (active high)**: digital input	not active: pin open or applied voltage < 1,5VDC active: applied voltage 3,5-50VDC, SELV	D159 [0]				○	○	○	○	○								
	○ **Ain 2 0-10V/PWM**: analog input	Ri=100K, characteristic curve parameterizable, fPWM=1k..10KHz, SELV	D159 [2]		○	○													
	○ **Ain 2 4-20mA**: analog input	Ri=125R, characteristic curve parameterizable, SELV	D159 [3]																
IO3	○ **Din 3 (active high)**: digital input	not active: pin open or applied voltage < 1,5VDC active: applied voltage 3,5-50VDC, SELV	D15A [0]						○	○	○								
	○ **Din 3 (active low)**: digital input	active: pin open or applied voltage 3,5-50VDC not active: applied voltage < 1,5VDC, SELV	D15A [1]						○	○	○								
	○ **PWMin 3**: digital input	40Hz - 10kHz, characteristics parameterizable not active: pin open or applied voltage 3,5-50VDC active: applied voltage < 1,5VDC, SELV	D15A [7]																
	○ **Aout 3 0-10V**: analog output	function parameterizable, max. 5mA, max output frequency 300Hz, SELV	D15A [4]									○							○
	○ **Tacho out** (pulses), analog output	0-10V max. 5mA, max output frequency 300Hz, SELV	D15A [5]																
	○ **Diagnostics out** (pulses)	0-10V max. 5mA, max output frequency 300Hz, SELV	D15A [6]																
RSA RSB	RS485 bus connection,	MODBUS RTU, specification V6.0, SELV			○		○	○	○	○	○								
Vout	voltage output	voltage parameterizable 3,3...24VDC +/- 5,5%, Pmax=800mW, short-circuit-proof, supply for external devices, SELV	D16E [...]																
	alternatively: Input auxillary power supply for parameter-ization via RS485/MODBUS RTU without line voltage	15...50VDC																	

Beijing Hengrui Mechanical and Electrical Equipment Co,Ltd Phone +86 10-62547612 · Fax +86 10-62547612 · zhangyu@bjhengrui.cn · en.bjhengrui.com

EC centrifugal module - RadiCal

backward-curved, single-intake

with support bracket

Curves: Air performance 50 Hz

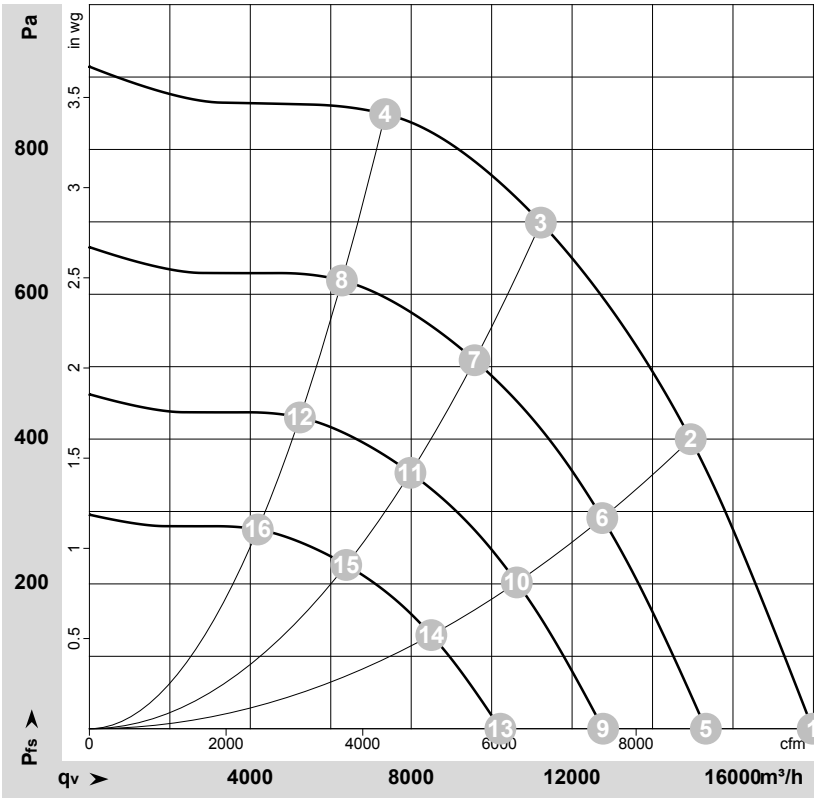

ρ = 1.15 kg/m³ ± 2 %

Measurement: LU-181577-1

Air performance measured according to ISO 5801 installation category A. For detailed information on the measurement setup, contact ebm-papst. Intake sound level: Sound power level according to ISO 13347 / sound pressure level measured at 1 m distance from fan axis. The values given are valid under the specified measuring conditions and may vary due to conditions of installation. For deviations from the standard configuration, the parameters have to be checked on the installed unit.

Measured values

	U	f	n	P_{ed}	I	LpA_{in}	LwA_{in}	LwA_{out}	q_V	p_{fs}	q_V	p_{fs}
	V	Hz	min^{-1}	W	A	dB(A)	dB(A)	dB(A)	m^3/h	Pa	cfm	in. wg
1	400	50	1400	2317	3.60	82	90	94	17980	0	10585	0.00
2	400	50	1400	3245	4.98	76	83	88	14950	400	8800	1.61
3	400	50	1400	3600	5.50	73	80	86	11225	700	6605	2.81
4	400	50	1400	3265	5.02	77	84	88	7350	850	4325	3.41
5	400	50	1200	1435	2.23	78	86	90	15325	0	9020	0.00
6	400	50	1200	2010	3.09	72	79	84	12750	294	7505	1.18
7	400	50	1200	2219	3.40	69	76	82	9575	511	5635	2.05
8	400	50	1200	2033	3.12	73	80	84	6280	619	3695	2.49
9	400	50	1000	830	1.29	74	81	85	12770	0	7515	0.00
10	400	50	1000	1163	1.79	67	74	79	10625	204	6255	0.82
11	400	50	1000	1284	1.97	64	71	77	7980	355	4695	1.43
12	400	50	1000	1177	1.81	68	76	80	5230	430	3080	1.73
13	400	50	800	425	0.66	68	75	80	10215	0	6015	0.00
14	400	50	800	595	0.91	61	68	74	8500	131	5005	0.53
15	400	50	800	658	1.01	59	66	71	6385	227	3755	0.91
16	400	50	800	602	0.93	63	70	74	4185	275	2465	1.10

U = Voltage · f = Frequency · n = Speed (rpm) · P_{ed} = Power consumption · I = Current draw · LpA_{in} = Sound pressure level intake side · LwA_{in} = Sound power level intake side
LwA_{out} = Sound power level outlet side · q_V = Air flow · p_{fs} = Pressure increase

Beijing Hengrui Mechanical and Electrical Equipment Co,Ltd Phone +86 10-62547612 · Fax +86 10-62547612 · zhangyu@bjhengrui.cn · en.bjhengrui.com