R3G355-RG56-01

EC centrifugal fan - RadiCal

backward curved, single inlet

ASIA PACIFIC SHENGRUI LIMITED
Phone +86 10-62547612
zhangyu@bjhengrui.cn
www.apacfan.com

Nominal data

Type	**R3G355-RG56-01**
Motor	**M3G112-EA**

Phase		3~
Nominal voltage	VAC	400
Nominal voltage range	VAC	380 .. 480
Frequency	Hz	50/60
Type of data definition		ml
Speed	min^{-1}	2240
Power input	W	930
Current draw	A	1.7
Min. ambient temperature	°C	-25
Max. ambient temperature	°C	60

ml = Max. load · me = Max. efficiency · fa = Running at free air · cs = Customer specs · cu = Customer unit
Subject to alterations

Data according to ErP directive

		Actual	Request 2015
01 Overall efficiency η_{es}	%	66.9	51.1
02 Measurement category		A	
03 Efficiency category		Static	
04 Efficiency grade N		77.8	62
05 Variable speed drive		Yes	

09 Power input P_{ed}	kW	0.92
09 Air flow q_v	m³/h	3205
09 Pressure increase p_{fs}	Pa	640
10 Speed n	min^{-1}	2240
11 Specific ratio*		1.01

Data definition with optimum efficiency.
The ErP data is determined using a motor-impeller combination in a standardised measurement configuration.

* Specific ratio = 1 + p_{fs} / 100 000 Pa

LU-140167

EC centrifugal fan - RadiCal

backward curved, single inlet

Technical features

Mass	8.4 kg
Size	355 mm
Surface of rotor	Coated in black
Material of electronics housing	Die-cast aluminium
Material of impeller	PP plastic
Number of blades	6
Direction of rotation	Clockwise, seen on rotor
Type of protection	IP 54
Insulation class	"B"
Humidity class	F4-1
Max. permissible ambient motor temp. (transp./ storage)	+80 °C
Min. permissible ambient motor temp. (transp./storage)	-40 °C
Mounting position	Refer to product drawing
Condensate discharge holes	Rotor-side
Operation mode	S1
Motor bearing	Ball bearing
Technical features	- Output 10 VDC, max. 10 mA - Output 20 VDC, max. 50 mA - Output for slave 0-10 V - Input for sensor 0-10 V or 4-20 mA - External 24 V input (programming) - Alarm relay - Integrated PID controller - Motor current limit - PFC, passive - RS485 MODBUS RTU - Soft start - Control input 0-10 VDC / PWM - Control interface with SELV potential safely disconnected from the mains - Over-temperature protected electronics / motor - Line undervoltage / phase failure detection
EMC interference immunity	Acc. to EN 61000-6-2 (industrial environment)
EMC harmonics	Acc. to EN 61000-3-2/3
EMC interference emission	Acc. to EN 61000-6-3 (household environment)
Touch current acc. IEC 60990 (measuring network Fig. 4, TN system)	<= 3.5 mA
Electrical leads	Via terminal box
Motor protection	Thermal overload protector (TOP) wired internally
Cable exit	Variable
Protection class	I (if protective earth is connected by customer)
Product conforming to standard	EN 61800-5-1; CE
Approval	CCC; EAC; UL 1004-7 + 60730

ebmpapst

EC centrifugal fan - RadiCal

backward curved, single inlet

Product drawing

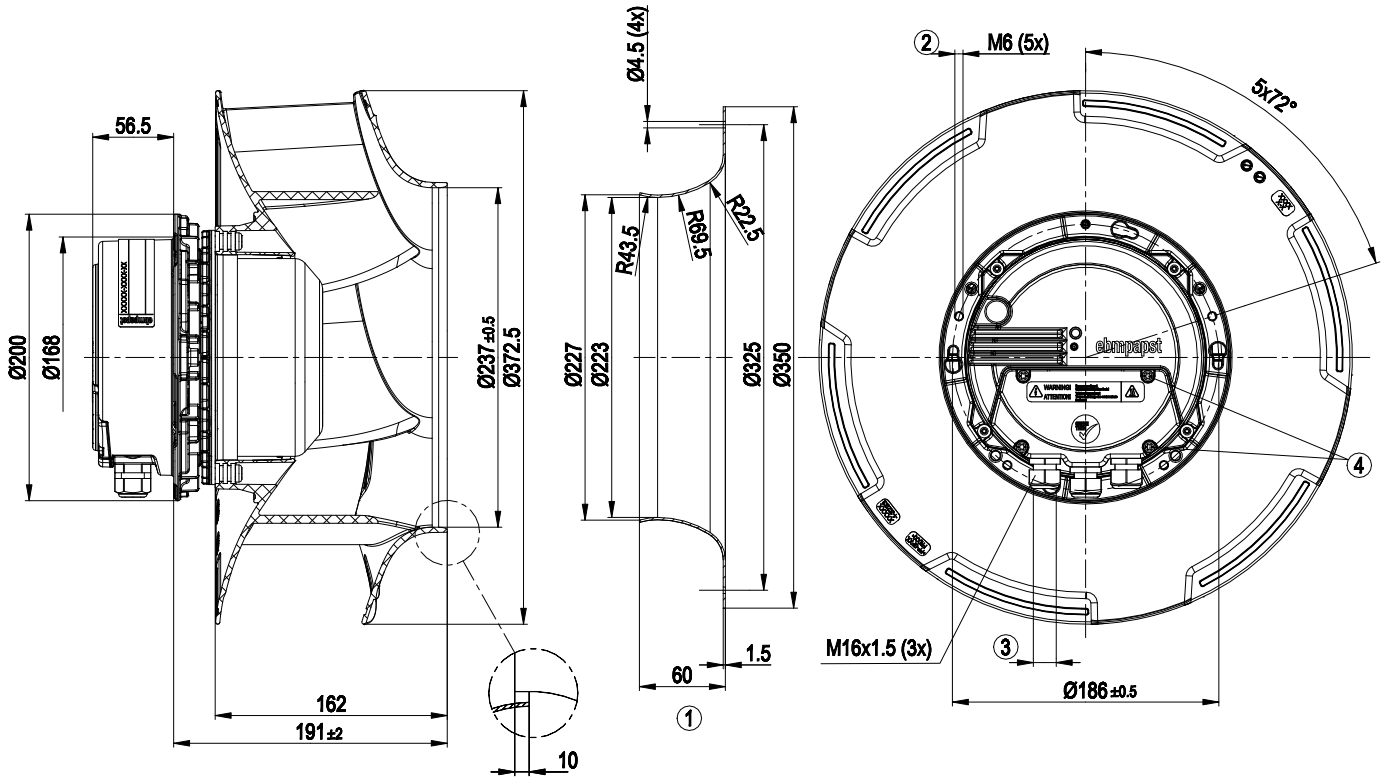

1	Inlet nozzle accessory part 35500-2-4013, not included in the standard scope of delivery
2	Depth of screw max. 16 mm
3	Cable diameter: min. 4 mm, max. 10 mm; tightening torque: 4±0.6 Nm
4	Tightening torque 3.5±0.5 Nm

EC centrifugal fan - RadiCal

backward curved, single inlet

Connection screen

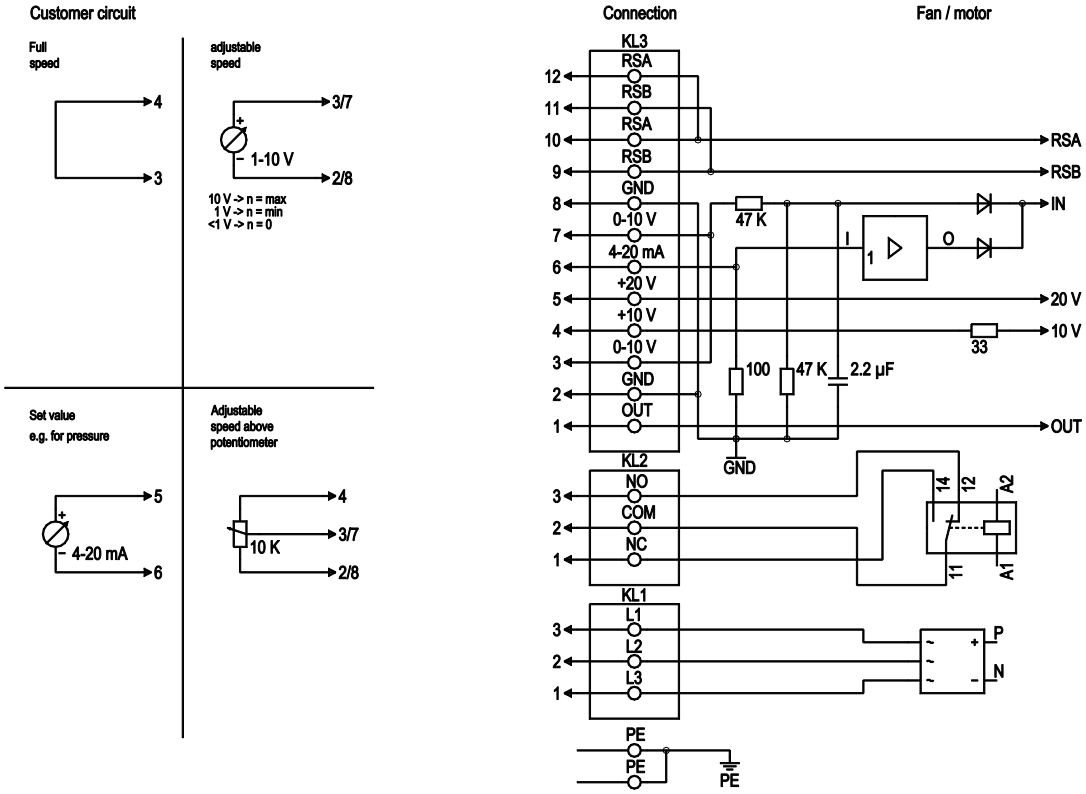

No.	Conn.	Designation	Function / assignment
PE		PE	Protective earth connection
KL1	1, 2, 3	L1, L2, L3	Supply voltage, voltage range (see type plate), 50/60 Hz
KL2	1	NC	Floating status contact, break with error
KL2	2	COM	Floating status contact, changeover contact, common connection (2 A, max. 250 VAC, min. 10 mA, AC1)
KL2	3	NO	Floating status contact, close with error
KL3	1	OUT	Analogue output, 0-10 VDC, max. 3 mA, SELV, Output of the actual motor duty cycle (PWM): 1 V corresponds to 10% PWM, 10 V correspond to 100% PWM.
KL3	2, 8	GND	Signal ground for control interface, SELV
KL3	3, 7	0-10 V	Set value / actual sensor value input 0-10 VDC, impedance 100 kΩ only as alternative to 4-20 mA input, SELV
KL3	4	+10 V	Voltage output 10 VDC (+/-3%), max. 10 mA, power supply for external devices (e.g. potentiometer), SELV
KL3	5	+20 V	Voltage output 20 VDC (+25%/-10%), max. 50 mA, supply voltage for external devices (e.g. sensors), SELV
KL3	6	4-20 mA	Set value / actual sensor value input 4-20 mA, impedance 100 Ω, only as alternative to 0-10 V input, SELV
KL3	9, 11	RSB	RS485 interface for MODBUS, RSB
KL3	10, 12	RSA	RS485 interface for MODBUS, RSA

ebmpapst

EC centrifugal fan - RadiCal

backward curved, single inlet

Charts: Air flow 50 Hz

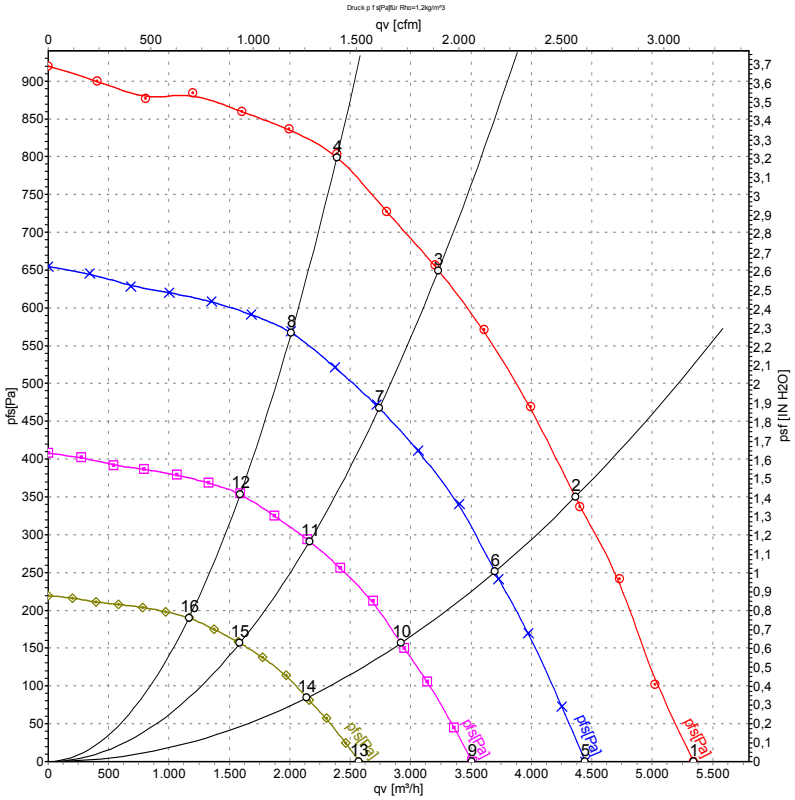

Measurement: LU-140167

Air performance measured as per ISO 5801 Installation category A. For detailed information on the measuring set-up, please contact ebm-papst. Suction-side noise levels: LwA measured as per ISO 13347 / LpA measured with 1m distance to fan axis. The values given are valid under the measuring conditions mentioned above and may vary according to the actual installation situation. With any deviation from the standard set-up, the specific values have to be checked and reviewed with the unit installed.

Measured values

	U	f	n	P_{ed}	I	LpA_{in}	LwA_{in}	qv	p_{fs}
	V	Hz	min^{-1}	W	A	dB(A)	dB(A)	m^3/h	Pa
1	400	50	2280	670	1.30	83	90	5340	0
2	400	50	2240	810	1.60	75	82	4365	350
3	400	50	2240	930	1.70	67	75	3230	650
4	400	50	2255	890	1.70	68	76	2390	800
5	400	50	1900	387	0.77	78	85	4445	0
6	400	50	1900	495	0.96	71	78	3700	251
7	400	50	1900	566	1.08	63	71	2740	468
8	400	50	1900	530	1.02	64	72	2010	570
9	400	50	1500	190	0.38	72	79	3510	0
10	400	50	1500	244	0.47	65	72	2920	156
11	400	50	1500	278	0.53	57	65	2165	292
12	400	50	1500	261	0.50	58	66	1590	355
13	400	50	1100	75	0.15	64	71	2575	0
14	400	50	1100	96	0.19	57	64	2140	84
15	400	50	1100	110	0.21	50	57	1585	157
16	400	50	1100	103	0.20	50	58	1165	191

U = Supply voltage · f = Frequency · n = Speed · P_{ed} = Power input · I = Current draw · LpA_{in} = Sound pressure level inlet side · LwA_{in} = Sound power level inlet side · qv = Air flow
p_{fs} = Pressure increase

ebmpapst