**R3G190-RC05-03**

# EC centrifugal fan - RadiCal

backward-curved, single-intake

Beijing Hengrui Mechanical and Electrical Equipment Co,Ltd
Phone +86 10-62547612
zhangyu@bjhengrui.cn
en.bjhengrui.com

## Nominal data

| | |
|---|---|
| **Type** | **R3G190-RC05-03** |
| **Motor** | **M3G055-BI** |

| | | |
|---|---|---|
| Phase | | 1~ |
| Nominal voltage | VAC | 230 |
| Nominal voltage range | VAC | 200 .. 240 |
| Frequency | Hz | 50/60 |
| Method of obtaining data | | ml |
| Speed (rpm) | $min^{-1}$ | 3200 |
| Power consumption | W | 83 |
| Current draw | A | 0.75 |
| Min. ambient temperature | °C | -25 |
| Max. ambient temperature | °C | 60 |

ml = Max. load · me = Max. efficiency · fa = Free air · cs = Customer specification · ce = Customer equipment
Subject to change

# EC centrifugal fan - RadiCal

backward-curved, single-intake

## Technical description

| | |
|---|---|
| **Weight** | 1.1 kg |
| **Fan size** | 190 mm |
| **Rotor surface** | Thick-film passivated |
| **Electronics housing material** | Die-cast aluminum |
| **Impeller material** | PA plastic |
| **Number of blades** | 7 |
| **Direction of rotation** | Clockwise, viewed toward rotor |
| **Degree of protection** | IP54 |
| **Insulation class** | "B" |
| **Max. permitted ambient temp. for motor (transport/storage)** | + 80 °C |
| **Min. permitted ambient temp. for motor (transport/storage)** | - 40 °C |
| **Installation position** | Any |
| **Condensation drainage holes** | None, open rotor |
| **Mode** | S1 |
| **Motor bearing** | Ball bearing |
| **Technical features** | - Output 10 VDC, max. 1.1 mA<br>- Tach output<br>- Power limiter<br>- Motor current limitation<br>- Soft start<br>- Control input 0-10 VDC / PWM<br>- Control interface with SELV potential safely disconnected from the mains<br>- Overvoltage detection<br>- Thermal overload protection for electronics/motor<br>- Line undervoltage detection |
| **EMC immunity to interference** | According to EN 61000-6-2 (industrial environment) |
| **EMC circuit feedback** | According to EN 61000-3-2/3 |
| **EMC interference emission** | According to EN 61000-6-3 (household environment) |
| **Touch current according to IEC 60990 (measuring circuit Fig. 4, TN system)** | <= 3.5 mA |
| **Motor protection** | Locked-rotor protection |
| **With cable** | Variable |
| **Protection class** | I (with customer connection of protective earth) |
| **Conformity with standards** | EN 60335-1; CE |
| **Approval** | UL 2111; CCC; EAC; CSA C22.2 No. 77 |



Beijing Hengrui Mechanical and Electrical Equipment Co,Ltd Phone +86 10-62547612 · Fax +86 10-62547612 · zhangyu@bjhengrui.cn · en.bjhengrui.com

# EC centrifugal fan - RadiCal

backward-curved, single-intake

## Product drawing

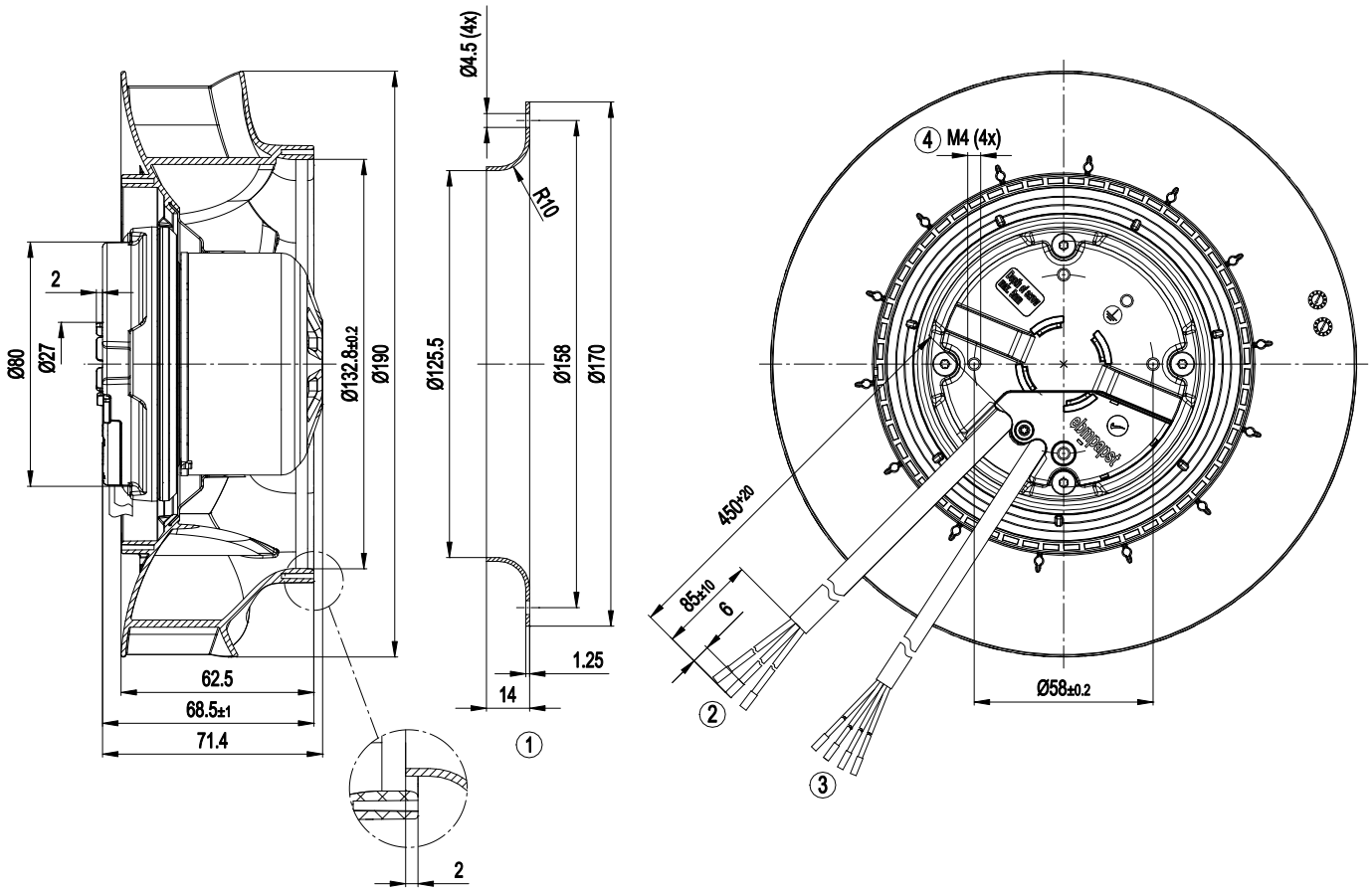


| | |
|---|---|
| 1 | Accessory part: inlet ring 09576-2-4013 not included in scope of delivery |
| 2 | Cable PVC AWG20, 3x crimped splices |
| 3 | Cable PVC AWG22, 4x crimped splices |
| 4 | Max. clearance for screw 5 mm |



Beijing Hengrui Mechanical and Electrical Equipment Co,Ltd Phone +86 10-62547612 · Fax +86 10-62547612 · zhangyu@bjhengrui.cn · en.bjhengrui.com

# EC centrifugal fan - RadiCal

backward-curved, single-intake

## Connection diagram

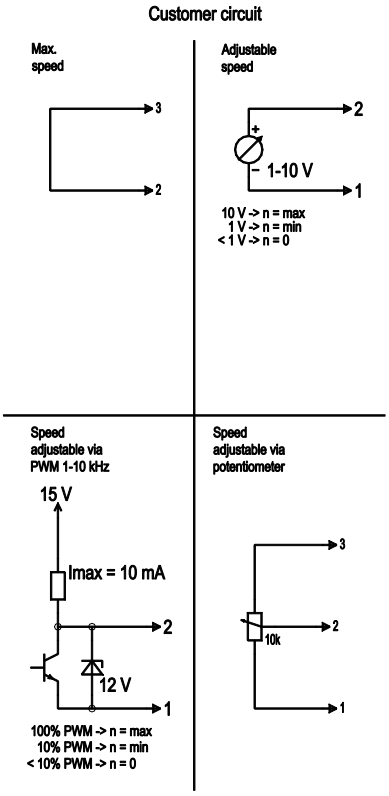


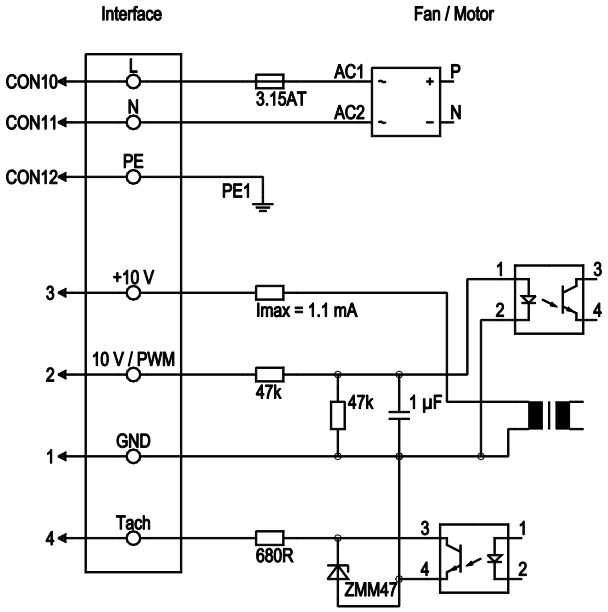


| No. | Conn. | Designation | Color | Function/assignment |
|---|---|---|---|---|
| | CON10 | L | black | Power supply 230 VAC, 50-60 Hz, see nameplate for voltage range |
| | CON11 | N | blue | Neutral conductor |
| | CON12 | PE | green/yellow | Protective earth |
| | 1 | GND | blue | GND connection for control interface |
| | 2 | 0-10V PWM | yellow | Control input 0-10 V or PWM, electrically isolated |
| | 3 | 10 V / max. 1,1 mA | red | Voltage output 10 VDC 1.1 mA, electrically isolated, short-circuit-proof |
| | 4 | Tacho | white | Tach output: open collector, 1 pulse per revolution, electrically isolated |



Beijing Hengrui Mechanical and Electrical Equipment Co,Ltd Phone +86 10-62547612 · Fax +86 10-62547612 · zhangyu@bjhengrui.cn · en.bjhengrui.com

# EC centrifugal fan - RadiCal

backward-curved, single-intake

## Curves: Air performance 50 Hz

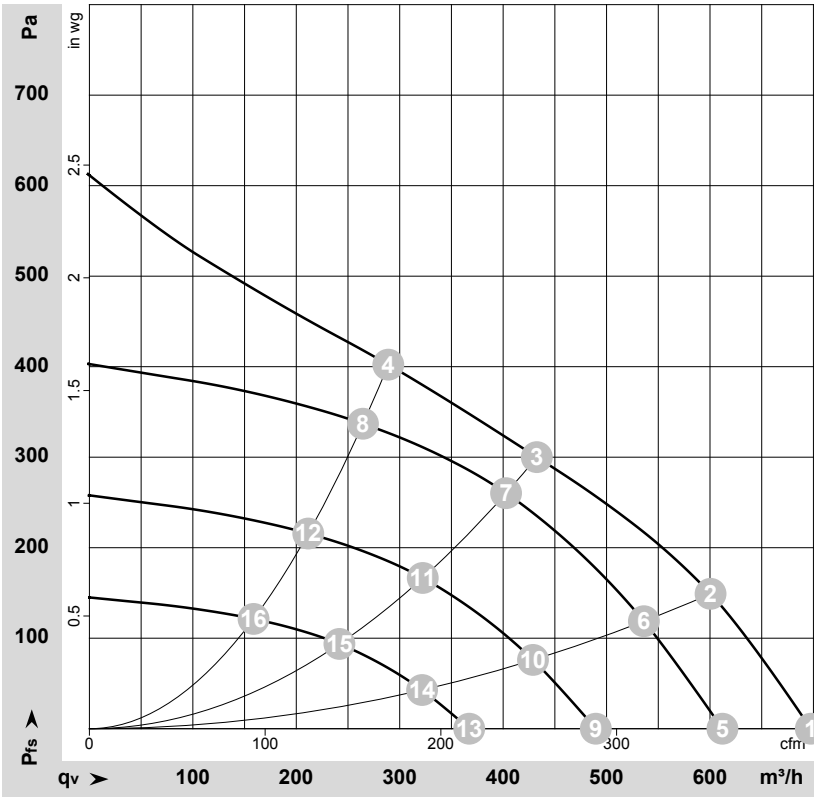


ρ = 1.15 kg/m³ ± 2 %

Measurement: LU-171430-1

Air performance measured according to ISO 5801 installation category A. For detailed information on the measurement setup, contact ebm-papst. Intake sound level: Sound power level according to ISO 13347 / sound pressure level measured at 1 m distance from fan axis. The values given are valid under the specified measuring conditions and may vary due to conditions of installation. For deviations from the standard configuration, the parameters have to be checked on the installed unit.

## Measured values

| | U | f | n | $P_{ed}$ | I | $LpA_{in}$ | $LwA_{in}$ | qv | $p_{fs}$ | qv | $p_{fs}$ |
|---|---|---|---|---|---|---|---|---|---|---|---|
| | V | Hz | $min^{-1}$ | W | A | dB(A) | dB(A) | $m^3/h$ | Pa | CFM | inH2O |
| 1 | 230 | 50 | 3420 | 75 | 0.67 | 66 | 73 | 695 | 0 | 410 | 0.00 |
| 2 | 230 | 50 | 3360 | 79 | 0.70 | 60 | 68 | 600 | 150 | 355 | 0.60 |
| 3 | 230 | 50 | 3200 | 83 | 0.75 | 58 | 66 | 435 | 300 | 255 | 1.20 |
| 4 | 230 | 50 | 3275 | 83 | 0.73 | 60 | 69 | 290 | 400 | 170 | 1.61 |
| 5 | 230 | 50 | 3000 | 51 | 0.45 | | | 610 | 0 | 360 | 0.00 |
| 6 | 230 | 50 | 3000 | 56 | 0.50 | | | 535 | 119 | 315 | 0.48 |
| 7 | 230 | 50 | 3000 | 69 | 0.60 | | | 405 | 261 | 235 | 1.05 |
| 8 | 230 | 50 | 3000 | 64 | 0.56 | | | 265 | 337 | 155 | 1.35 |
| 9 | 230 | 50 | 2400 | 26 | 0.23 | | | 490 | 0 | 290 | 0.00 |
| 10 | 230 | 50 | 2400 | 29 | 0.26 | | | 430 | 76 | 250 | 0.31 |
| 11 | 230 | 50 | 2400 | 35 | 0.31 | | | 320 | 167 | 190 | 0.67 |
| 12 | 230 | 50 | 2400 | 33 | 0.29 | | | 210 | 216 | 125 | 0.87 |
| 13 | 230 | 50 | 1800 | 11 | 0.10 | | | 365 | 0 | 215 | 0.00 |
| 14 | 230 | 50 | 1800 | 12 | 0.11 | | | 320 | 43 | 190 | 0.17 |
| 15 | 230 | 50 | 1800 | 15 | 0.13 | | | 240 | 94 | 140 | 0.38 |
| 16 | 230 | 50 | 1800 | 14 | 0.12 | | | 160 | 121 | 95 | 0.49 |

U = Power supply · f = Frequency · n = Speed (rpm) · $P_{ed}$ = Power consumption · I = Current draw · $LpA_{in}$ = Sound pressure level intake side · $LwA_{in}$ = Sound power level intake side
qv = Air flow · $p_{fs}$ = Pressure increase



Beijing Hengrui Mechanical and Electrical Equipment Co,Ltd Phone +86 10-62547612 · Fax +86 10-62547612 · zhangyu@bjhengrui.cn · en.bjhengrui.com