R3G355-AI56-01

EC centrifugal fan

backward curved, single inlet

Beijing Hengrui Mechanical and Electrical Equipment Co,Ltd
Phone +86 10-62547612
zhangyu@bjhengrui.cn
en.bjhengrui.com

Nominal data

Type	**R3G355-AI56-01**
Motor	**M3G112-EA**

Phase		3~
Nominal voltage	VAC	400
Nominal voltage range	VAC	380 .. 480
Frequency	Hz	50/60
Type of data definition		ml
Speed	min^{-1}	2200
Power input	W	950
Current draw	A	1.75
Min. ambient temperature	°C	-25
Max. ambient temperature	°C	60

ml = Max. load · me = Max. efficiency · fa = Running at free air · cs = Customer specs · cu = Customer unit
Subject to alterations

Data according to ErP directive

Installation category	A
Efficiency category	Static
Variable speed drive	Yes
Specific ratio*	1.01

* Specific ratio = 1 + p_{fs} / 100 000 Pa

		Actual	Request 2013	Request 2015
Overall efficiency η_{es}		59.9	47	51
Efficiency grade N		70.9	58	62
Power input P_{ed}	kW	0.9		
Air flow q_v	m³/h	2805		
Pressure increase p_{fs}	Pa	642		
Speed n	min^{-1}	2220		

Data definition with optimum efficiency.

EC centrifugal fan

backward curved, single inlet

Technical features

Mass	8.4 kg
Size	355 mm
Surface of rotor	Coated in black
Material of electronics housing	Die-cast aluminium
Material of impeller	Aluminium sheet
Number of blades	6
Direction of rotation	Clockwise, seen on rotor
Type of protection	IP 54
Insulation class	"B"
Humidity class	F4-1
Max. permissible ambient motor temp. (transp./ storage)	+80 °C
Min. permissible ambient motor temp. (transp./storage)	-40 °C
Mounting position	Shaft horizontal or rotor on bottom; rotor on top on request
Condensate discharge holes	Rotor-side
Operation mode	S1
Motor bearing	Ball bearing
Technical features	- Output 10 VDC, max. 10 mA - Output 20 VDC, max. 50 mA - Output for slave 0-10 V - Input for sensor 0-10 V or 4-20 mA - Alarm relay - Integrated PID controller - Motor current limit - PFC, passive - RS485 ebmBUS - Soft start - Control input 0-10 VDC / PWM - Control interface with SELV potential safely disconnected from the mains - Over-temperature protected electronics / motor - Line undervoltage / phase failure detection
EMC interference immunity	Acc. to EN 61000-6-2 (industrial environment)
EMC harmonics	Acc. to EN 61000-3-2/3
EMC interference emission	Acc. to EN 61000-6-3 (household environment)
Touch current acc. IEC 60990 (measuring network Fig. 4, TN system)	<= 3.5 mA
Electrical leads	Via terminal box
Motor protection	Thermal overload protector (TOP) wired internally
Protection class	I (if protective earth is connected by customer)
Product conforming to standard	EN 61800-5-1; CE
Approval	CCC; GOST

Beijing Hengrui Mechanical and Electrical Equipment Co,Ltd Phone +86 10-62547612 · Fax +86 10-62547612 · zhangyu@bjhengrui.cn · en.bjhengrui.com

EC centrifugal fan

backward curved, single inlet

Product drawing

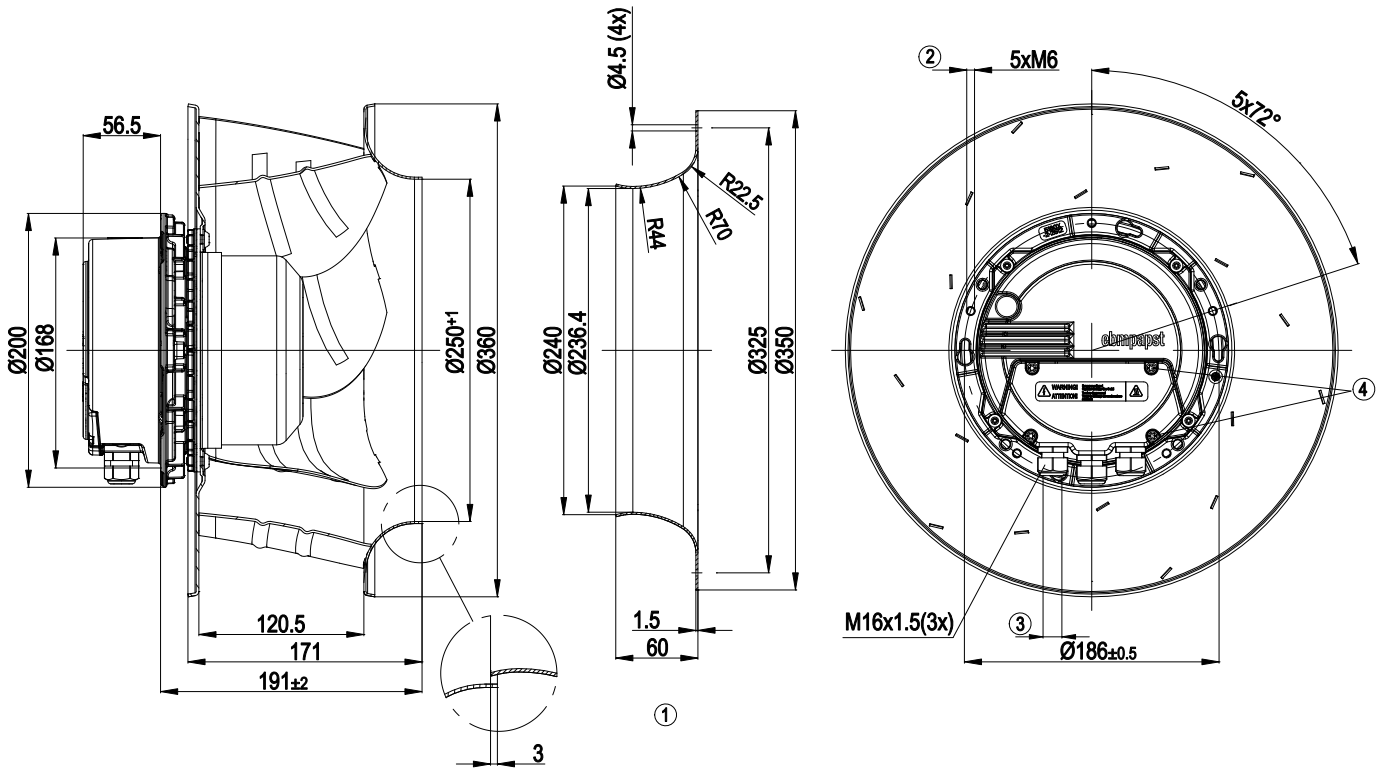

1	Accessory part: Inlet nozzle 35560-2-4013, not included in the standard scope of delivery
2	Depth of screw max. 16 mm
3	Cable diameter: min. 4 mm; max. 10 mm; tightening torque: 2.5±0.4 Nm
4	Tightening torque 3.5±0.5 Nm

Beijing Hengrui Mechanical and Electrical Equipment Co,Ltd Phone +86 10-62547612 · Fax +86 10-62547612 · zhangyu@bjhengrui.cn · en.bjhengrui.com

EC centrifugal fan

backward curved, single inlet

Connection screen

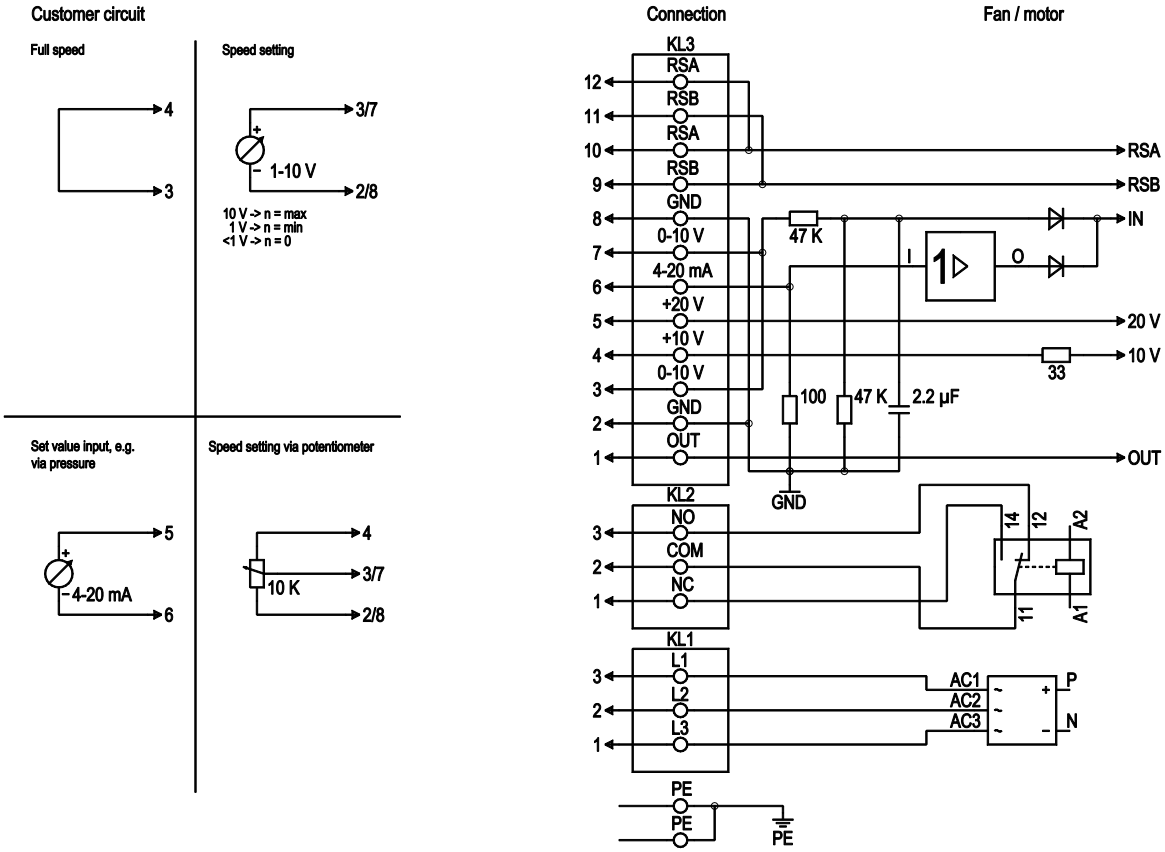

No.	Pin	Signal	Function / assignment
PE		PE	Protective earth connection
KL1	1, 2, 3	L1, L2, L3	Supply voltage, 50/60 Hz
KL2	1	NC	Floating status message contact, normally closed connection; break for failure
KL2	2	COM	Floating status message contact, changeover contact, common connection (2 A, max. 250 VAC, min. 10 mA, AC1)
KL2	3	NO	Floating status message contact, normally open connection; make for failure
KL3	1	OUT	Analog output, 0-10 VDC, max. 3 mA, SELV, output of the current level control coefficient: 1 V equates to 10% level control coefficient. 10 V equate to 100% level control coefficient.
KL3	2, 8	GND	Reference mass for control interface, SELV
KL3	3, 7	0-10 V	Use control / actual value input 0-10 VDC, impedance 100 kΩ only as alternative to 4-20 mA input, SELV
KL3	4	+10 V	Voltage output 10 VDC (+/-3%), max. 10 mA, supply voltage for external devices (e.g. potentiometers), SELV
KL3	5	+20 V	Voltage output 20 VDC (+25%/-10%), max. 50 mA, supply voltage for external devices (e.g. sensors), SELV
KL3	6	4-20 mA	Use control / actual value input 4-20 mA, impedance 100 Ω, only as alternative to 0-10 V input, SELV
KL3	9, 11	RSB	RS485 interface for ebmBus, RSB, SELV
KL3	10, 12	RSA	RS485 interface for ebmBus, RSA, SELV

Beijing Hengrui Mechanical and Electrical Equipment Co,Ltd Phone +86 10-62547612 · Fax +86 10-62547612 · zhangyu@bjhengrui.cn · en.bjhengrui.com

EC centrifugal fan

backward curved, single inlet

Charts: Air flow 50 Hz

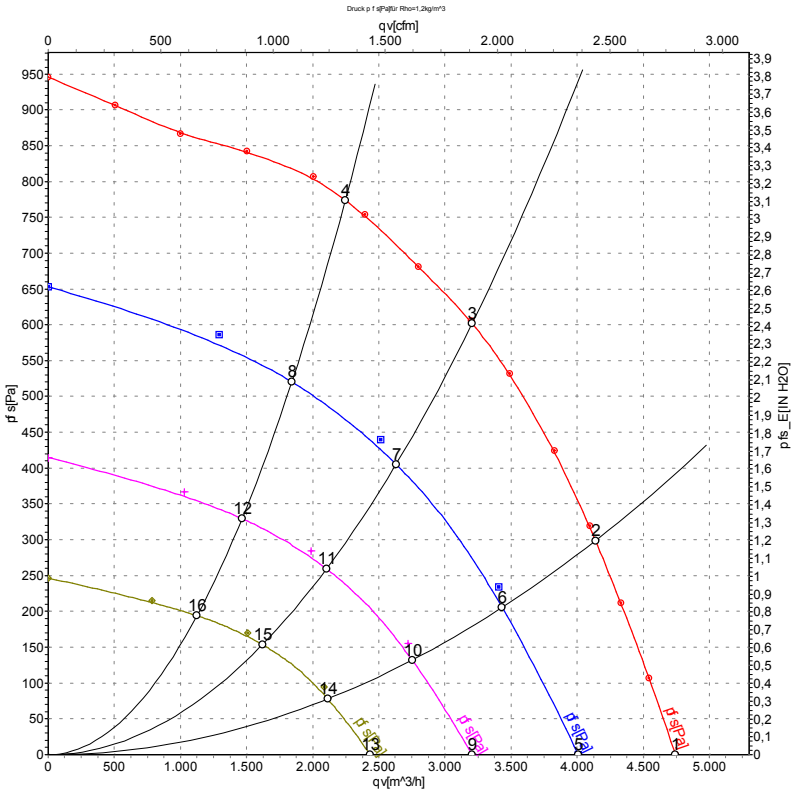

Measurement: LU-78488
Measurement: LU-120618
Measurement: LU-120619
Measurement: LU-120620

Air performance measured as per ISO 5801 Installation category A. For detailed information on the measuring set-up, please contact ebm-papst. Suction-side noise levels: LwA measured as per ISO 13347 / LpA measured with 1m distance to fan axis. The values given are valid under the measuring conditions mentioned above and may vary according to the actual installation situation. With any deviation from the standard set-up, the specific values have to be checked and reviewed with the unit installed.

Measured values

	U	f	n	P_{ed}	I	LpA_{in}	LwA_{in}	LwA_{out}	qv	p_{fs}
	V	Hz	min^{-1}	W	A	dB(A)	dB(A)	dB(A)	m^3/h	Pa
1	400	50	2200	690	1.35	81	88	94	4745	0
2	400	50	2200	859	1.61	77	84	90	4140	300
3	400	50	2200	950	1.75	73	80	86	3205	600
4	400	50	2200	851	1.61	76	83	88	2245	775
5	400	50	1825	386	0.72	74	81	87	4010	0
6	400	50	1825	476	0.87	70	77	84	3430	224
7	400	50	1825	502	0.90	67	74	80	2630	414
8	400	50	1825	462	0.84	69	76	82	1840	520
9	400	50	1450	206	0.43	67	73	79	3205	0
10	400	50	1450	251	0.51	64	71	77	2750	145
11	400	50	1450	265	0.53	61	67	73	2105	264
12	400	50	1450	244	0.49	62	69	74	1465	329
13	400	50	1100	106	0.26	58	65	71	2435	0
14	400	50	1100	123	0.29	56	63	68	2115	87
15	400	50	1100	126	0.29	53	60	66	1620	156
16	400	50	1100	118	0.28	54	61	67	1125	194

U = Supply voltage · f = Frequency · n = Speed · P_{ed} = Power input · I = Current draw · LpA_{in} = Sound pressure level inlet side · LwA_{in} = Sound power level inlet side · LwA_{out} = Sound power level outlet side
qv = Air flow · p_{fs} = Pressure increase

Beijing Hengrui Mechanical and Electrical Equipment Co,Ltd Phone +86 10-62547612 · Fax +86 10-62547612 · zhangyu@bjhengrui.cn · en.bjhengrui.com